NOTE

A nomenclature change has been introduced for the 5000 Series products. The 5103N/D11 is now called the 5111 Storage Oscilloscope.

This composite manual incorporates the 5103N and D11 manuals, formerly bound under separate cover.

TEKTRONIX®

5111 STORAGE OSCILLOSCOPE

INSTRUCTION MANUAL

Tektronix, Inc.
P.O. Box 500
Beaverton, Oregon 97077

Serial Number _____

070-2135-00

First Printing APR 1976

TABLE OF CONTENTS

		Page
SECTION 1	SPECIFICATION	
	Introduction	1-1
	Instrument Options	1-1
	Table 1-1 Electrical Characteristics	1-1
	Table 1-2 Environmental Characteristics	1-2
	Table 1-3 Mainframe Physical Data	1-3
SECTION 2	OPERATING INSTRUCTIONS	
	General	2-1
	Preliminary Information	2-1
	Rackmounting	2-1
	Operating Voltage	2-1
	Operating Temperature	2-2
	Plug-In Units	2-2
	Installation	2-3
	Selection	2-3
	General Operating Information	2-3
	Display Switching Logic	2-3
	Vertical Display Mode	2-4
	X-Y Operation	2-4
	Raster Display	2-4
	Basic Oscilloscope Applications	2-4
	General	2-4
	Peak-to-Peak Voltage Measurements—AC	2-5
	Instantaneous Voltage Measurements—DC	2-5
	Comparison Measurements	2-6
	Time Period Measurement	2-7
	Determining Frequency	2-8
	Risetime Measurements	2-9
	Multi-Trace Phase Difference Measurement	2-10
	X-Y Phase Measurements	2-11
SECTION 3	CIRCUIT DESCRIPTION	
	Block Diagram Description	3-1
	Interface	3-1
	Clock Generator	3-1
	Countdown Circuit	3-1
	Auxiliary Boards	3-2
	Vertical Amplifier	3-2
	Horizontal Amplifier	3-2
	Power Supply	3-2
	Power Input	3-2
	Low-Voltage Rectifiers and Unregulated Outputs	3-2
	Line Trigger	3-3
	CRT Heater Windings	3-3
	Calibrator	3-3
SECTION 4	SYSTEM MAINTENANCE	
	5100 Panel Removal	4-1
	Preventive Maintenance	4-1
	General	3-1
	Cleaning	4-1
	Calibration	4-1
	Troubleshooting	4-1
	General	4-1
	Troubleshooting Aids	4-1
	Troubleshooting Equipment	4-3
	Troubleshooting Techniques	4-3
	Replacement Parts	4-5
	Standard Parts	4-5
	Special Parts	4-5
	Ordering Parts	4-5
	Component Replacement	4-5
	General	4-5
	Circuit Board Replacement	4-5
	Transistor and Integrated Circuit Replacement	4-6
	Interconnecting Pin Replacement	4-6
	Switch Replacement	4-6
	Cathode-Ray Tube Replacement	4-7
	Neon Bulb Replacement	4-8
	Power Transformer Replacement	4-8
	Fuse Replacement	4-8
	Recalibration After Repair	4-8
SECTION 5	CALIBRATION	
	Introduction	5-1
	Services Available	5-1
	Equipment Required	5-1
	Preliminary Procedure	5-1
	Procedure	5-2
SECTION 6	RACKMOUNTING	
	Introduction	6-1
	Instrument Conversion	6-1
	Mounting Method	6-1
	Rack Dimensions	6-1
	Installing the Slide-Out Tracks	6-1
	R5100 Installation and Adjustment	6-4
	Maintenance	6-4
SECTION 7	ELECTRICAL PARTS LIST	
	Abbreviations and Symbols	
	Parts Ordering Information	
	Index of Electrical Parts List	
	Electrical Parts List	
SECTION 8	DIAGRAMS and CIRCUIT BOARD ILLUSTRATIONS	
	Symbols and Reference Designators	
	Schematic Diagrams and Component Board Locations	
SECTION 9	MECHANICAL PARTS LIST	
	Mechanical Parts List	
	Mechanical Parts List Illustration	
	Accessories	
	Repackaging	
	CHANGE INFORMATION	

Abbreviations and symbols used in this manual are based on or taken directly from IEEE Standard 260 "Standard Symbols for Units", MIL-STD-12B and other standards of the electronics industry. Change information, if any, is located at the rear of this manual.

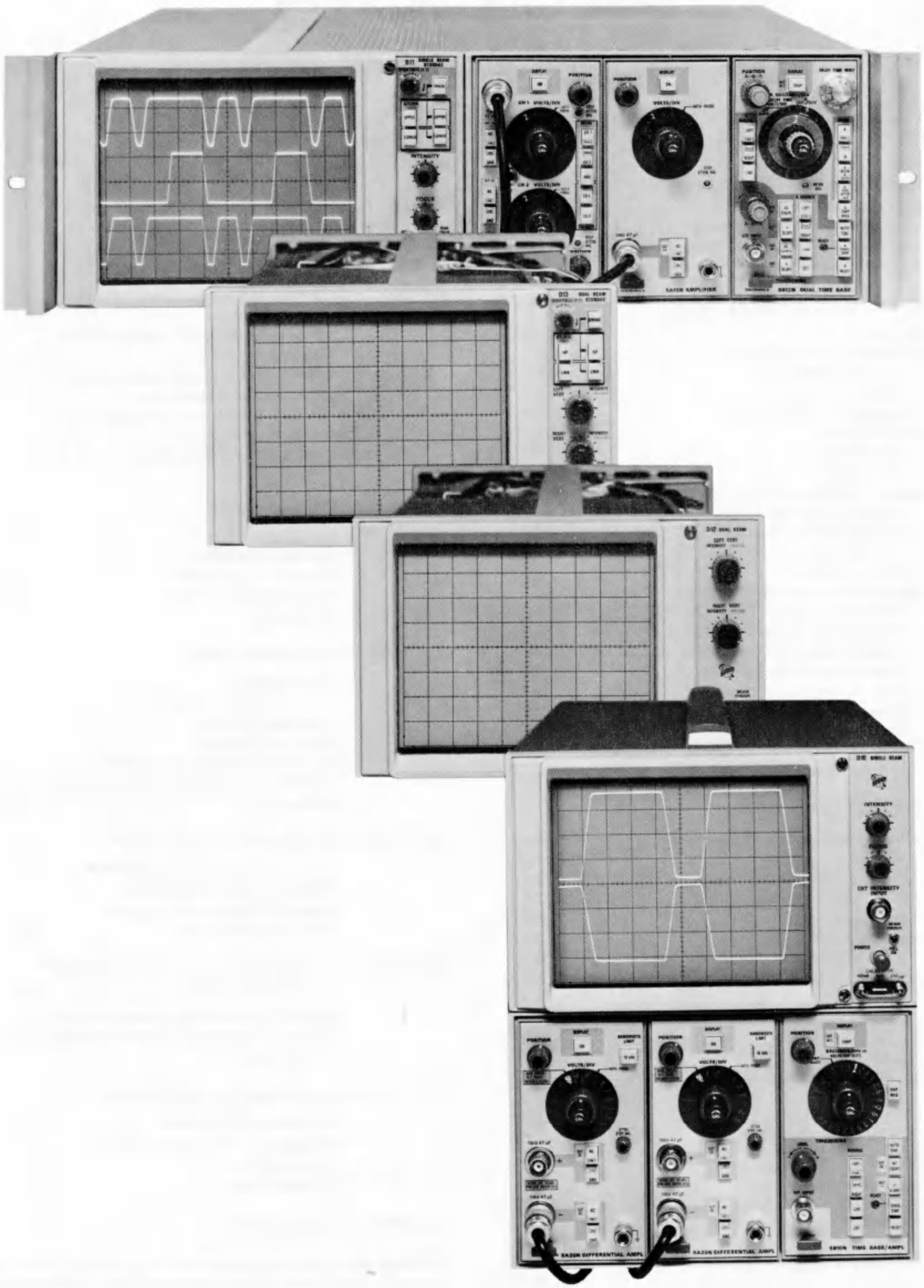

Fig. 1-1. 5100-Series Oscilloscope System.

SECTION 1
SPECIFICATION

Change information, if any, affecting this section will be found at the rear of the manual.

Introduction

The 5103N Power Supply/Amplifier module is an interconnection unit for the display module and plug-in units. It is operated with a display module, and comprises one-half of the 5100-series oscilloscope mainframe. It accepts up to three plug-in units and provides pre-amplification for the deflection signals. The center and left plug-in compartments are connected to the vertical deflection system, and the right plug-in compartment is connected to the horizontal deflection system. Electronic switching between the left and center plug-ins allow a multi-trace vertical display (chopped and alternate time-sharing modes). The unit also contains regulated DC-voltage supplies to provide power to the instrument system.

The following electrical characteristics apply over an ambient temperature range of 0°C to +50°C.

In this manual the word Volts/Div or division refers to major graticule division.

NOTE

Many of the measurement capabilities of the 5100-Series Oscilloscope are determined by the choice of display modules and plug-in units. The following electrical characteristics apply to the Power Supply/Amplifier unit only, unless noted otherwise. For display modules or plug-ins only, see the specification section of the manual for that unit.

Power Transformer

The transformer permits operation from 100-volt, 110-volt, 120-volt, 200-volt, 220-volt, and 240-volt sources with power line frequencies of from 50 to 60 hertz and 400 hertz.

TABLE 1-1

ELECTRICAL CHARACTERISTICS

Characteristic	Performance Requirement	Supplemental Information
Vertical and Horizontal Amplifiers		
Input Signal Amplitude (Differential Input)		50 millivolts per displayed division, vertical and horizontal.
Horizontal Centering		0.5 division or less.
Bandwidth	DC to at least 2.5 megahertz.	
X-Y Phase Difference (Checked with two plug-ins of the same type)	1° or less to 100 kilohertz.	
Sensitivity Change	Accuracy degrades by up to 1% when operated in split-screen storage.	

TABLE 1-1 (cont)

Characteristic	Performance Requirement	Supplemental Information
Channel Switching		
Chop Clock Frequency	About 200 kilohertz.	
Channel Chop Rate	About 100 kilohertz.	
Plug-In Chop Rate	About 50 kilohertz.	
Alternate Frequency	Sweep rate (once each sweep).	
Plug-In Alternate Rate		One-half sweep rate (once every two sweeps).
Channel Alternate Rate		One-fourth sweep rate (once every four sweeps).

TABLE 1-2

ENVIRONMENTAL CHARACTERISTICS

Characteristic	Performance
Temperature	
Operating Range	0°C to +50°C.
Non-operating Range	–40°C to +70°C.
Altitude	
Operating Range	To 15,000 feet.
Non-operating Range	To 50,000 feet.
Vibration Range	To 0.015 inch peak-to-peak displacement at 50 cycles per second.
Shock Range	To 30 g's, 1/2 sine, 11 milliseconds duration.

TABLE 1-3
MAINFRAME PHYSICAL DATA
(5103N with a Display Unit)

Characteristic		5100-Series Oscilloscope	R5100-Series Oscilloscope
Dimensions (maximum)			
Height	(overall)	11.6 in. (29.5 cm)	5.2 in. (13.2 cm)
	(cabinet)	10.5 in. (26.7 cm)	
Length	(overall)	19.9 in. (50.5 cm)	20.0 in. (51.0 cm)
	(cabinet)	18.3 in. (46.5 cm)	18.3 in. (46.5 cm)
Width	(overall)	8.4 in. (21.4 cm)	19.0 in. (48.3 cm)
	(cabinet)		16.8 in. (42.7 cm)
Net Weight		≈22.8 lbs. (10.3 kg)	≈23.5 lbs. (10.7 kg)
Shipping Weight		≈30.0 lbs. (13.6 kg)	≈39.0 lbs. (17.7 kg)
Export Weight		≈45.0 lbs. (20.4 kg)	≈59.0 lbs. (26.8 kg)

NOTES

SECTION 2
OPERATING INSTRUCTIONS

Change information, if any, affecting this section will be found at the rear of this manual.

General

To effectively use the 5103N, the operation and capabilities of the instrument must be known. The 5103N Power Supply/Amplifier module forms the basis of an oscilloscope system, and requires a display module and plug-ins to complete the system. This section describes interconnection and general operation of the units, including preliminary information for first-time turn-on, selection and installation of plug-ins, general operating information, and some basic oscilloscope applications.

Detailed operating information for a specific display module or plug-in is given in the instruction manual for that unit.

PRELIMINARY INFORMATION

Rackmounting

The 5103N Power Supply/Amplifier module and the display module can be fastened together stacked or side by side, permitting operation as a bench oscilloscope, or it can be operated in a standard 19-inch rack. Complete instructions for rackmounting are given in Section 6, Rackmounting.

NOTE

Before attempting to operate the instrument, make sure the module wiring interconnections are correct, and if display modules have been changed, that the correct auxiliary board is installed in the socket on the plug-in interface board.

Operating Voltage

CAUTION

This instrument is designed for operation from a power source with its neutral at or near earth (ground) potential with a separate safety-earth conductor. It is not intended for operation from two phases of a multi-phase system, or across the legs of a single-phase, three-wire system.

NOTE

The power cord on Tektronix instruments may conform to either IEC or the older NEC requirements, as follows:

Conductor	USA & Canada	IEC
Line	Black	Brown
Neutral	White	Light Blue*
Safety-Earth	Green w/yellow stripe	Green w/yellow stripe

*Tinned copper conductor.

Power Transformer

The 5100-Series Oscilloscope is to be operated from either a 120-volt or a 220-volt nominal line voltage source. This transformer is wired to permit one of three regulating ranges to be selected for either 120-volt or 220-volt nominal operation. The range for which the primary taps are set is marked on the rear panel of the instrument. Use the following procedure to obtain correct instrument operation from the line voltage available.

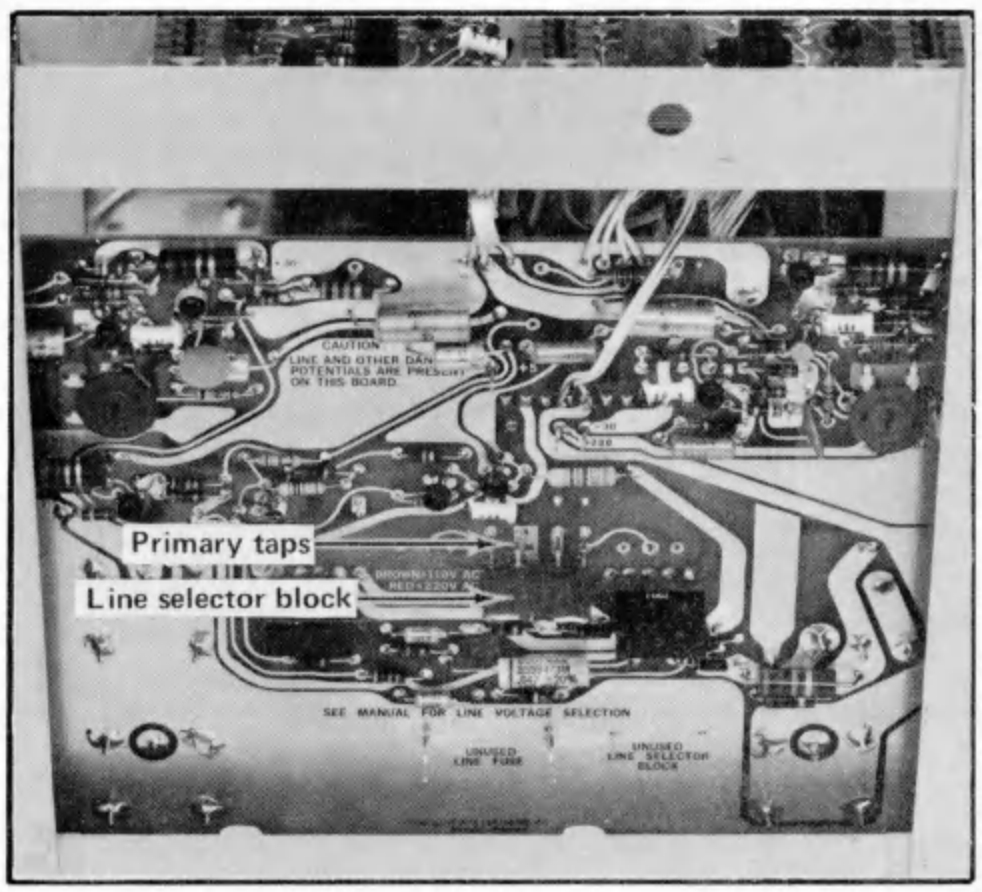

Fig. 2-1. Location of the line-selector block on the Power Supply circuit board.

1. Disconnect the instrument from the power source.

2. Remove the bottom dust cover of the instrument to gain access to the Power Supply circuit board.

3. To convert from 120 volts to 220 volts nominal line voltage, or vice versa, remove the line-selector block from the square-pin connectors (see Fig. 2-1) and replace it with the other block. Remove the line fuse from the fuse holder located on the rear panel of the display module and replace

it with one having the correct rating. The unused line-selector block and line fuse can be stored on the Power Supply circuit board. Change the line-cord power plug to match the power-source receptacle or use an adapter.

NOTE

The 120-volt block is color coded brown, and it connects the transformer primary windings in parallel. The 220-volt block is color coded red, and it connects the primary windings in series.

4. To change regulating ranges, place the line-selector block on the desired set of square pins. Select a range which is centered about the average line voltage to which the instrument is to be connected (see Table 2-1).

5. Change the nominal line voltage information on the rear panel of the instrument. Use a non-abrasive eraser to remove the previous data, and mark in new data with a pencil.

6. Replace the bottom dust cover and apply power to the instrument.

CAUTION

Damage to the instrument may result from incorrect placement of the line-selector block.

TABLE 2-1

Standard Transformer (SN BO50000 - below)

Line Selector Block Position	Regulating Ranges
L Do not use	Internally disconnected
M (110 V Nominal)	99 VAC to 121 VAC
H (120 V Nominal)	108 VAC to 132 VAC

Universal Transformer (SN BO50000-up)

Line Selector Block Position	Regulating Ranges	
	120-Volts Nominal	220-Volts Nominal
L	90 VAC to 110 VAC	180 VAC to 220 VAC
M	99 VAC to 121 VAC	198 VAC to 242 VAC
H	108 VAC to 132 VAC	216 VAC to 264 VAC
Line Fuse Data	1.6 A slow-blow	1A slow-blow

Operating Temperature

The 5103N can be operated where the ambient air temperature is between 0°C and +50°C. The instrument can be stored in ambient temperature between −40°C and +70°C. After storage at a temperature beyond the operating limits, allow the chassis temperature to come within the operating limits before power is applied.

A thermal cutout in the display module provides thermal protection and disconnects the power to the instrument if the internal temperature exceeds a safe operating level. This device will automatically re-apply power when the temperature returns to a safe level.

PLUG-IN UNITS

General

The 5103N is designed to accept up to three Tektronix 5-series plug-in units. This plug-in feature allows a variety of display combinations and also allows selection of bandwidth, sensitivity, display mode, etc., to meet the measurement requirements. In addition, it allows the oscilloscope system to be expanded to meet future measurement requirements. The overall capabilities of the resultant system are in large part determined by the characteristics of the plug-ins selected.

Installation

To install a plug-in unit into one of the plug-in compartments, align the slots in the top and bottom of the plug-in with the associated guides in the plug-in compartment. Push the plug-in unit firmly into the plug-in compartment until it locks into place. To remove a plug-in, pull the release latch on the plug-in unit to disengage it and pull the unit out of the plug-in compartment. Plug-in units can be removed or installed without turning off the instrument power. It is not necessary that all of the plug-in compartments be filled to operate the instrument; the only plug-ins needed are those required for the measurement to be made.

When the display unit is calibrated in accordance with the calibration procedure given in the display unit instruction manual, the vertical and horizontal gain are standardized. This allows calibrated plug-in units to be changed

from one plug-in compartment to another without recalibration. However, the basic calibration of the individual plug-in units should be checked when they are installed in this system to verify their measurement accuracy. See the operating instructions section of the plug-in unit manual for verification procedure.

Selection

The plug-in versatility of the 5100-series oscilloscope allows a variety of display modes with many different plug-ins. The following information is provided here to aid in plug-in selection.

To produce a single-trace display, install a single-channel vertical unit (or dual-channel unit set for single-channel operation) in either of the vertical (left or center) compartments and a time-base unit in the horizontal (right) compartment. For dual-trace displays, either install a dual-channel vertical unit in one of the vertical compartments or install a single-channel vertical unit in each vertical compartment. A combination of a single-channel and a dual-channel vertical unit allows a three-trace display; likewise, a combination of two dual-channel vertical units allows a four-trace display.

To obtain a vertical sweep with the input signal displayed horizontally, insert the time-base unit into one of the vertical compartments and the amplifier unit in the horizontal compartment. If a vertical sweep is used, there is no retrace blanking; however, if used in the right vertical (center) compartment, internal triggering is provided.

For X-Y displays, either a 5A-series amplifier unit or a 5B-series time-base unit having an amplifier channel can be installed in the horizontal compartment to accept the X signal. The Y signal is connected to a 5A-series amplifier unit installed in a vertical compartment.

Special purpose plug-in units may have specific restrictions regarding the compartments in which they can be installed. This information will be given in the instruction manuals for these plug-ins.

GENERAL OPERATING INFORMATION

Display Switching Logic

General. The electronic switching for time-shared displays is produced at the plug-in interface within the mainframe; however, the switching logic is selected on the plug-in units. The system allows any combination of plug-ins and Display switch settings. Refer to the individual plug-in manuals for specific capabilities and operating procedures.

Vertical Plug-in Compartments. When a vertical plug-in is in the active mode (Display button pushed in), a logic level is applied to the switching circuit in the mainframe and a display from this plug-in will occur. When two plug-ins are both active in the vertical compartments, a multi-trace display will occur (Alternate or Chopped). When no plug-in is in the active mode, the signal from the left compartment will be displayed. A time-base unit operated in one of the vertical compartments has a permanent internal connection to apply a logic level to the switching circuit; thus, a vertical trace produced by this unit will always be displayed.

Horizontal Plug-in Compartment. Alternate or Chopped display switching is selected on a time-base unit operated in the horizontal compartment. When the Display switch is out (Alt), a negative impulse is supplied at the end of the sweep to allow alternate switching between plug-ins and plug-in channels. When the Display switch is pushed in (Chop), a chopped display will appear if a multi-trace display is required by the plug-ins in the vertical compartments. An amplifier plug-in unit operated in the horizontal compartment has a permanent internal connection to provide a chopped display if it is required.

Switching Sequence. Four display time slots are provided on a time-sharing basis. When two vertical plug-ins are active, each receives two time slots and the switching sequence is left, left, right, right, etc. The two time slots allotted to each plug-in are divided between amplifier channels in a dual-trace unit; if two dual-trace plug-ins are active, then the switching sequence is left Channel 1, left Channel 2, right Channel 1, right Channel 2, etc. If only one vertical plug-in is active, it receives all four time slots. The switching sequence is the same for both the Alternate and Chopped display modes.

Vertical Display Mode

Display On. To display a signal, the Display button of the applicable vertical plug-in unit must be pushed in to activate the unit. If two plug-ins are installed in the vertical compartments and only the signal from one of the units is wanted, set the Display switch of the unwanted unit to Off (button out). If neither plug-in is activated, the signal from the left unit will be displayed. Both plug-ins can be activated for multi-trace displays.

Alternate Mode. The alternate position of the time-base unit Display switch produces a display which alternates between activated plug-ins and amplifier channels with each sweep of the CRT. The switching sequence is described under Display Switching Logic in this section. Although the Alternate mode can be used at all sweep rates, the Chop mode provides a more satisfactory display at sweep rates from about one millisecond/division to five seconds/division. At these slower sweep rates, alternate-mode switching becomes difficult to view.

Chopped Mode. The Chop position of the time-base unit Display switch produces a display which is electronically switched between channels at a 200-kilohertz rate. The switching sequence has been discussed earlier. In general, the Chop mode provides the best display at sweep rates slower than about one millisecond/division or whenever dual-trace, single-shot phenomena are to be displayed. At faster sweep rates, the chopped switching becomes apparent and may interfere with the display.

Dual-Sweep Displays. When a dual-sweep time-base unit is operated in the horizontal compartment, the alternate and chopped time-shared switching for either the A or B sweep is identical to that for a single time-base unit. However, if both the A and B sweeps are operating, the 5103N operates in the independent pairs mode. Under this condition, the left vertical unit is always displayed at the sweep rate of the A time base and the right vertical unit is displayed at the sweep rate of the B time base (non-delayed sweep only). This results in two displays that have completely independent vertical deflection and chopped or alternate sweep switching.

Dual-Beam Displays. When a dual-beam display module is operated with the 5103N, the switching sequence is altered slightly. Between-channel switching occurs; however, switching between plug-ins is not necessary and does not occur. Also, the left vertical unit is always displayed by the upper CRT beam and the right vertical unit is displayed by the lower CRT beam.

X-Y Operation

In some applications, it is desirable to display one signal versus another (X-Y) rather than against an internal sweep. The flexibility of the plug-in units available for use with the 5103N provides a means for applying a signal to the horizontal deflection system for this type of display. Some of the 5B-series time-base units can be operated as amplifiers in addition to their normal use as time-base generators, or an amplifier unit can be installed in the horizontal compartment. The latter method provides the best X-Y display, particularly if two identical amplifier units are used, since both the X and Y input systems will have the same capabilities and characteristics. In either case, the mainframe bandwidth and sensitivity are equal and inherent phase shift is adjustable to 0 degrees in the display module. For further information on obtaining X-Y displays, see the plug-in unit manuals.

Raster Display

A raster-type display can be used to effectively increase the apparent sweep length. For this type of display, the trace is deflected both vertically and horizontally by sawtooth signals, and is accomplished by installing a 5B-series time-base unit in one of the vertical compartments as well as one in the horizontal compartment. Normally, the unit in the vertical compartment should be set to a slower sweep rate than the one in the horizontal compartment; the number of horizontal traces in the raster depends upon the ratio between the two sweep rates. Information can be displayed on the raster using the Ext Intensity Input to provide intensity modulation of the display. This type of raster display could be used to provide a television-type display. Complete information on operation using the Z-axis feature is given in the operating instructions section of the display module manuals.

BASIC OSCILLOSCOPE APPLICATIONS

General

The 5100-Series Oscilloscope and its associated plug-in units provide a very flexible measurement system. The capabilities of the overall system depend mainly upon the plug-ins that are chosen for use with this instrument. The following information describes the procedures and techniques for making basic measurements. These applications are not described in detail, since each application must be adapted to the requirements of the individual measurement. Specific applications for the individual plug-in units are described in the manuals for those units. The overall system can also be used for many applications which are not described in detail either in this manual or in the manuals for the individual plug-in units. Contact your local Tektronix Field Office or representative in making specific measurements with this instrument.

The following books describe oscilloscope measurement techniques which can be adapted for use with this instrument.

Harley Carter, "An Introduction to the Cathode Ray Oscilloscope", Philips Technical Library, Cleaver-Hume Press Ltd., London, 1960.

J. Czech, "Oscilloscope Measuring Techniques", Philips Technical Library, Springer-Verlag, New York, 1965.

Robert G. Middleton, "Scope Waveform Analysis", Howard W. Sams & Co. Inc., The Bobbs-Merrill Company Inc., Indianapolis, 1963.

Robert G. Middleton and L. Donald Payne, "Using the Oscilloscope in Industrial Electronics", Howard W. Sams & Co. Inc., The Bobbs-Merrill Company Inc., Indianapolis, 1961.

John F. Rider and Seymour D. Uslan, "Encyclopedia of Cathode-Ray Oscilloscopes and Their Uses", John F. Rider Publisher Inc., New York, 1959.

John F. Rider, "Obtaining and Interpreting Test Scope Traces", John F. Rider Publisher Inc., New York, 1959.

Rufus P. Turner, "Practical Oscilloscope Handbook", Volumes 1 and 2, John F. Rider Publisher Inc., New York, 1964.

Peak-to-Peak Voltage Measurements—AC

To make peak-to-peak voltage measurements, use the following procedure:

1. Set the Input Coupling on the vertical plug-in unit to GND and connect the signal to the input connector.

2. Set the Input Coupling to AC and set the Volts/Div switch to display about 5 or 6 vertical divisions of the waveform. Check that the Variable Volts/Div control (red knob) is in the Cal position.

3. Adjust the time-base triggering controls for a stable display and set the Seconds/Div switch to display several cycles of the waveform.

4. Turn the vertical Position control so the lower portion of the waveform coincides with one of the graticule lines below the center horizontal line, and the top of the waveform is in the viewing area. Move the display with the horizontal Position control so one of the upper peaks is aligned with the center vertical reference line (see Fig. 2-2).

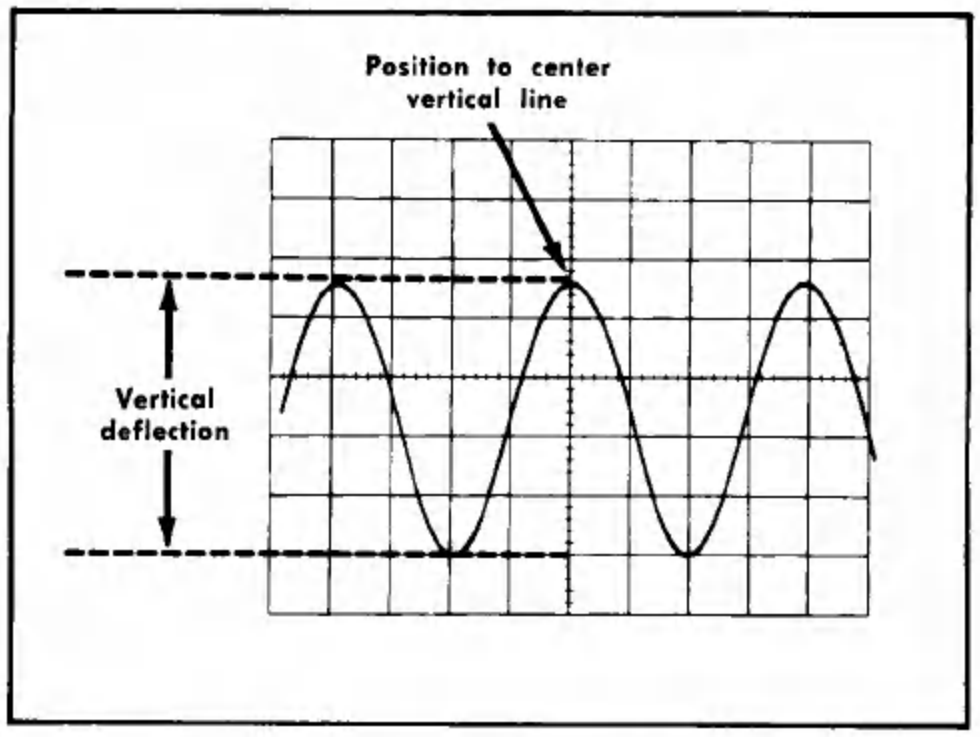

Fig. 2-2. Measuring peak-to-peak voltage of a waveform.

5. Measure the vertical deflection from peak to peak (divisions).

NOTE

This technique may also be used to make measurements between two points on the waveform, rather than peak to peak.

6. Multiply the distance (in divisions) measured in step 5 by the Volts/Div switch setting. Also include the attenuation factor of the probe, if applicable.

EXAMPLE: Assume a peak-to-peak vertical deflection of 4.6 divisions and a Volts/Div switch setting of 5 V.

$$\text{Peak-to-peak volts} = 4.6 \text{ (divisions)} \times 5 \text{ (Volts/Div setting)} = 23 \text{ volts}$$

NOTE

If an attenuator probe not having the capability to change the scale factor readout (Volts/Div) is used, multiply the right side of the above equation by the attenuation factor.

Instantaneous Voltage Measurement—DC

To measure the DC level at a given point on a waveform, use the following procedure:

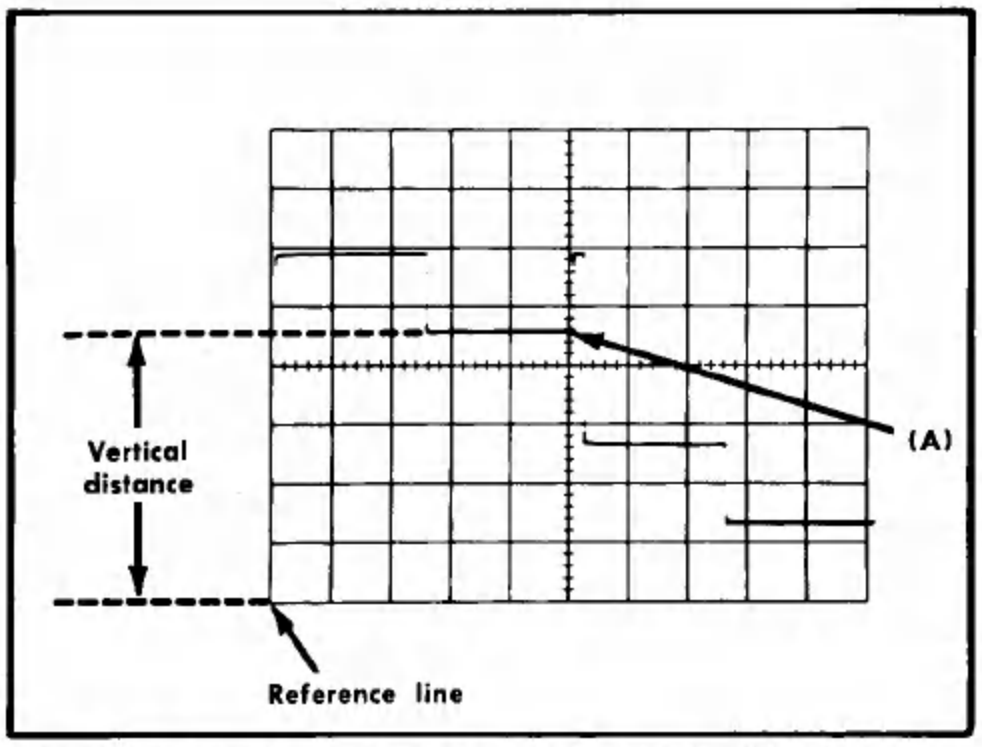

Fig. 2-3. Measuring instantaneous DC voltage with respect to a reference voltage.

1. Set the Input Coupling of the vertical plug-in unit to GND and position the trace to the bottom line of the graticule (or other selected reference line). If the voltage to be measured is negative with respect to ground, position the trace to the top line of the graticule. Do not move the vertical Position control after this reference has been established.

NOTE

To measure a voltage level with respect to a voltage other than ground, make the following changes to step 1: Set the Input Coupling switch to DC and apply the reference voltage to the input connector, then position the trace to the reference line.

2. Connect the signal to the input connector. Set the Input Coupling to DC (the ground reference can be checked at any time by setting the Input Coupling to GND).

3. Set the Volts/Div switch to display about 5 or 6 vertical divisions of the waveform. Check that the Variable Volts/Div control (red knob) is in the Cal position. Adjust the time-base triggering controls for a stable display.

4. Measure the distance in divisions between the reference line and the point on the waveform at which the DC level is to be measured. For example, in Fig. 2-3 the measurement is made between the reference line and point A.

5. Establish the polarity. The voltage is positive if the signal is applied to the + input connector and the waveform is above the reference line.

6. Multiply the distance measured in step 4 by the Volts/Div switch setting. Include the attenuation factor of the probe, if applicable (see the note following the Peak-to-Peak Voltage Measurement example).

EXAMPLE: Assume that the vertical distance measured is 4.6 divisions, the polarity is positive, and the Volts/Div switch setting is 2 V.

$$\text{Instantaneous Voltage} = \underset{\text{(divisions)}}{4.6} \times \underset{\text{(Volts/Div)}}{2} = \underset{\text{volts}}{+9.2}$$

Comparison Measurements

In some applications, it may be necessary to establish a set of deflection factors other than those indicated by the Volts/Div or Seconds/Div switches. This is useful for comparing signals to a reference voltage amplitude or period. To establish a new set of deflection factors based upon a specific reference amplitude or period, proceed as follows:

VERTICAL DEFLECTION FACTOR

1. Apply a reference signal of known amplitude to the vertical input connector. Using the Volts/Div switch and Variable Volts/Div control, adjust the display for an exact number of divisions. Do not move the Variable Volts/Div control after obtaining the desired deflection.

2. Divide the amplitude of the reference signal (volts) by the product of the deflection in divisions (established in step 1) and the Volts/Div switch setting. This is the Deflection Conversion Factor.

$$\text{Deflection Conversion Factor} = \frac{\text{reference signal amplitude (volts)}}{\text{deflection (divisions X Volts/Div setting}}$$

3. To determine the peak-to-peak amplitude of a signal compared to a reference, disconnect the reference and apply the signal to the input connector.

4. Set the Volts/Div switch to a setting that provides sufficient deflection to make the measurement. Do not readjust the Variable Volts/Div control.

5. To establish a Modified Deflection Factor at any setting of the Volts/Div switch, multiply the Volts/Div switch setting by the Deflection Conversion Factor established in step 2.

$$\text{Modified Deflection Factor} = \underset{\text{setting}}{\text{Volts/Div}} \times \underset{\text{Factor}}{\text{Deflection Conversion}}$$

6. Measure the vertical deflection in divisions and determine the amplitude by the following formula:

$$\text{Signal Amplitude} = \text{Modified Deflection Factor} \times \text{deflection (divisions)}$$

EXAMPLE: Assume a reference signal amplitude of 30 volts, a Volts/Div switch setting of 5 V and a deflection of four divisions. Substituting these values in the Deflection Conversion Factor formula (step 2):

$$\frac{30\ V}{(4)\ (5\ V)} = 1.5$$

Then, with a Volts/Div switch setting of 2 V, the Modified Deflection Factor (step 5) is:

$$(2\ V)\ (1.5) = 3 \text{ volts/division}$$

To determine the peak-to-peak amplitude of an applied signal which produces a vertical deflection of five divisions with the above conditions, use the Signal Amplitude formula (step 6):

$$(3\ V)\ (5) = 15 \text{ volts}$$

SWEEP RATE

1. Apply a reference signal of known frequency to the vertical input connector. Using the Seconds/Div switch and Variable Seconds/Div control, adjust the display so that one cycle of the signal covers an exact number of horizontal divisions. Do not change the Variable Seconds/Div control after obtaining the desired deflection.

2. Divide the period of the reference signal (seconds) by the product of the horizontal deflection in divisions (established in step 1) and the setting of the Seconds/Div switch. This is the Deflection Conversion Factor.

$$\text{Deflection Conversion Factor} = \frac{\text{reference signal period (seconds)}}{\text{horizontal deflection (divisions)} \times \text{Seconds/Div switch setting}}$$

3. To determine the period of an unknown signal, disconnect the reference and apply the unknown signal.

4. Set the Seconds/Div switch to a setting that provides sufficient horizontal deflection to make an accurate measurement. Do not readjust the Variable Seconds/Div control.

5. To establish a Modified Deflection Factor at any setting of the Seconds/Div switch, multiply the Seconds/Div switch setting by the Deflection Conversion Factor established in step 2.

$$\text{Modified Deflection Factor} = \text{Seconds/Div switch setting} \times \text{Deflection Conversion Factor}$$

6. Measure the horizontal deflection in divisions and determine the period by the following formula:

$$\text{Period} = \text{Modified Deflection Factor} \times \text{horizontal deflection (divisions)}$$

EXAMPLE: Assume a reference signal frequency of 455 hertz (period 2.2 milliseconds), a Seconds/Div switch setting of .2 ms, and a horizontal deflection of eight divisions. Substituting these values in the Deflection Conversion Factor formula (step 2):

$$\frac{2.2\ ms}{(8)\ (0.2\ ms)} = 1.375$$

Then, with a Seconds/Div switch setting of 50 μs, the Modified Deflection Factor (step 5) is:

$$(50\ \mu s)\ (1.375) = 68.75 \text{ microseconds/division}$$

To determine the time period of an applied signal which completes one cycle in seven horizontal divisions, use the Period formula (step 6):

$$(68.75\ \mu s)\ (7) = 481 \text{ microseconds}$$

This product can be converted to frequency by taking the reciprocal of the period (see application on Determining Frequency).

Time Period Measurement

To measure the time (period) between two points on a waveform, use the following procedure:

1. Connect the signal to the vertical input connector, select either AC or DC input coupling, and set the Volts/Div switch to display about four divisions of the waveform.

2. Set the time-base triggering controls to obtain a stable display. Set the Seconds/Div switch to the fastest sweep rate that will permit displaying one cycle of the waveform in less than eight divisions (some non-linearity may occur in the first and last graticule divisions of display). Refer to Fig. 2-4.

3. Adjust the vertical Position control to move the points between which the time measurement is made to the

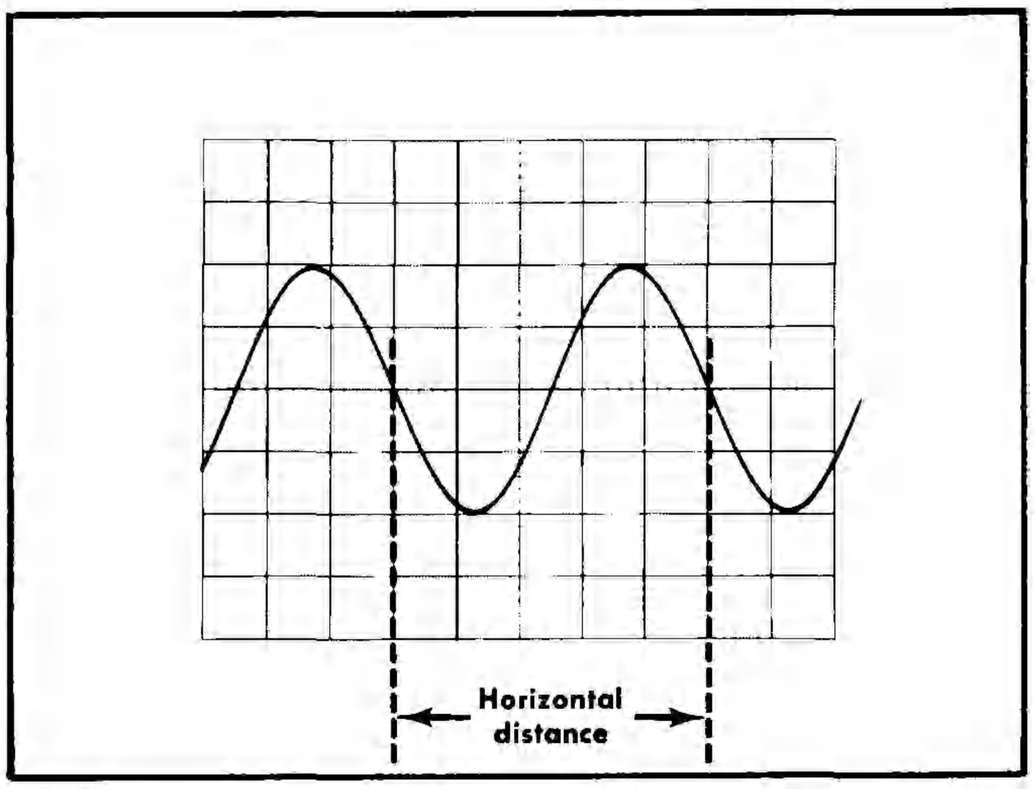

Fig. 2-4. Measuring time duration (period) between points on a waveform.

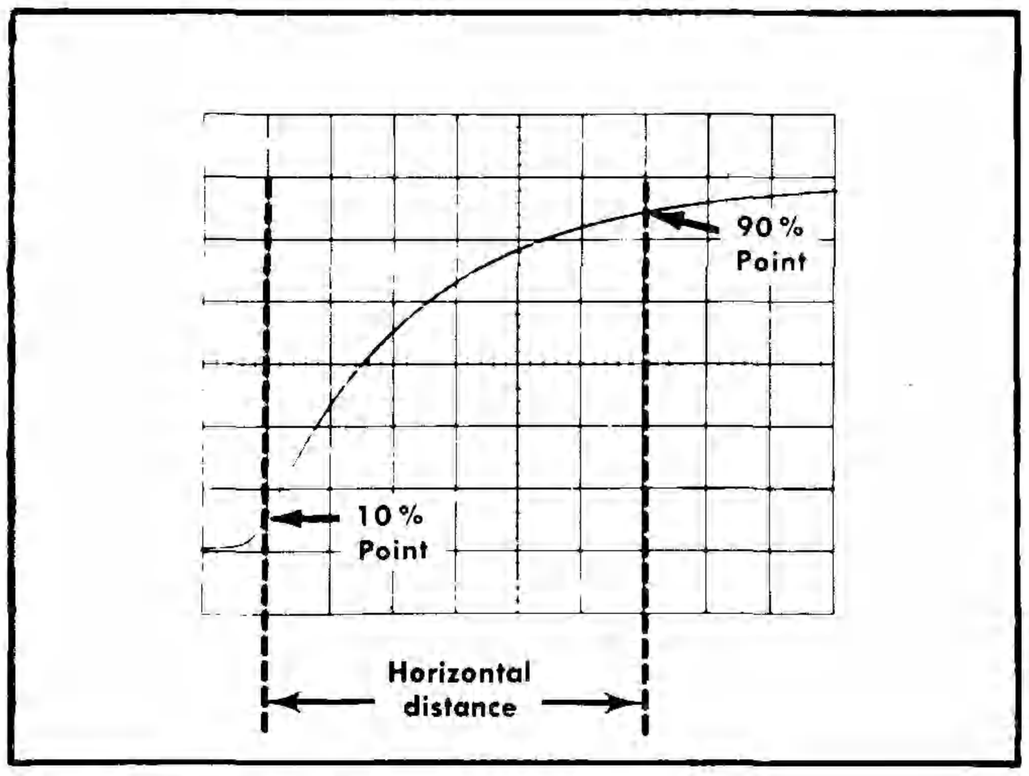

Fig. 2-5. Measuring risetime.

center horizontal line. Adjust the horizontal Position control to center the time-measurement points within the center eight divisions of the graticule.

4. Measure the horizontal distance between the time measurement points. Be sure the Variable Seconds/Div control is in the Cal position.

5. Multiply the distance measured in step 4 by the setting of the Seconds/Div switch.

EXAMPLE: Assume that the horizontal distance between the time-measurement points is five divisions and the Seconds/Div switch is set to .1 ms.

Using the formula:

$$\text{Period} = \text{horizontal distance (divisions)} \times \text{Seconds/Div switch setting}$$

$$= (5)\ (0.1\ \text{ms}) = 0.5\ \text{ms}$$

The period is 0.5 millisecond.

Determining Frequency

The time measurement technique can also be used to determine the frequency of a signal. The frequency of a periodically recurrent signal is the reciprocal of the time duration (period) of one cycle. Use the following procedure:

1. Measure the period of one cycle of the waveform as described in the previous application.

2. Take the reciprocal of the period to determine the frequency.

EXAMPLE: The frequency of the signal shown in Fig. 2-4, which has a period of 0.5 millisecond, is:

$$\text{Frequency} = \frac{1}{\text{period}} = \frac{1}{0.5\ \text{ms}} = 2\ \text{kilohertz}$$

Risetime Measurements

Risetime measurements employ basically the same techniques as the time-period measurements. The main difference is the points between which the measurement is made. The following procedure gives the basic method of measuring risetime between the 10% and 90% points of the waveform.

1. Connect the signal to the input connector.

2. Set the Volts/Div switch and Variable Volts/Div control to produce a display an exact number of divisions in amplitude.

3. Center the display about the center horizontal line with the vertical Position control.

4. Set the time-base triggering controls to obtain a stable display. Set the Seconds/Div switch to the fastest sweep rate that will display less than eight divisions between the 10% and 90% points on the waveform (see Fig. 2-5).

5. Determine the 10% and 90% points on the rising portion of the waveform. The figures given in Table 2-2 are for 10% up from the start of the rising portion and 10% down from the top of the rising portion (90% point).

TABLE 2-2

Divisions of display	10% and 90% points	Divisions vertically between 10% and 90% points
4	0.4 and 3.6 divisions	3.2
5	0.5 and 4.5 divisions	4.0
6	0.6 and 5.4 divisions	4.8
7	0.7 and 6.3 divisions	5.6
8	0.8 and 7.2 divisions	6.4

6. Adjust the horizontal Position control to move the 10% point of the waveform to the second vertical line of the graticule. For example, with a six-division display, the 10% point would be 0.6 division up from the start of the rising portion.

7. Measure the horizontal distance between the 10% and 90% points. Be sure the Variable Seconds/Div control is in the Cal position.

8. Multiply the distance measured in step 7 by the setting of the Seconds/Div switch.

EXAMPLE: Assume that the horizontal distance between the 10% and 90% points is six divisions and the Seconds/Div switch is set to 1 μs.

Using the period formula to find risetime:

$$\text{Risetime period} = \text{horizontal distance (divisions)} \times \text{Seconds/Div setting}$$

$$= (6)\ (1\ \mu s) = 6 \text{ microseconds}$$

The risetime is 6 microseconds

Time Difference Measurements

When used in conjunction with a calibrated time-base plug-in unit, the multi-trace feature of the 5100-series oscilloscope permits measurement of time difference between two or more separate events. To measure time difference, use the following procedure:

1. Set the Input Coupling switches of the amplifier channels to either AC or DC.

2. Set the Display Mode switch on the time-base unit to either Chop or Alt. In general, Chop is more suitable for low-frequency signals and the Alt position is more suitable for high-frequency signals. More information on determining the mode is given under Vertical Display Mode in this section.

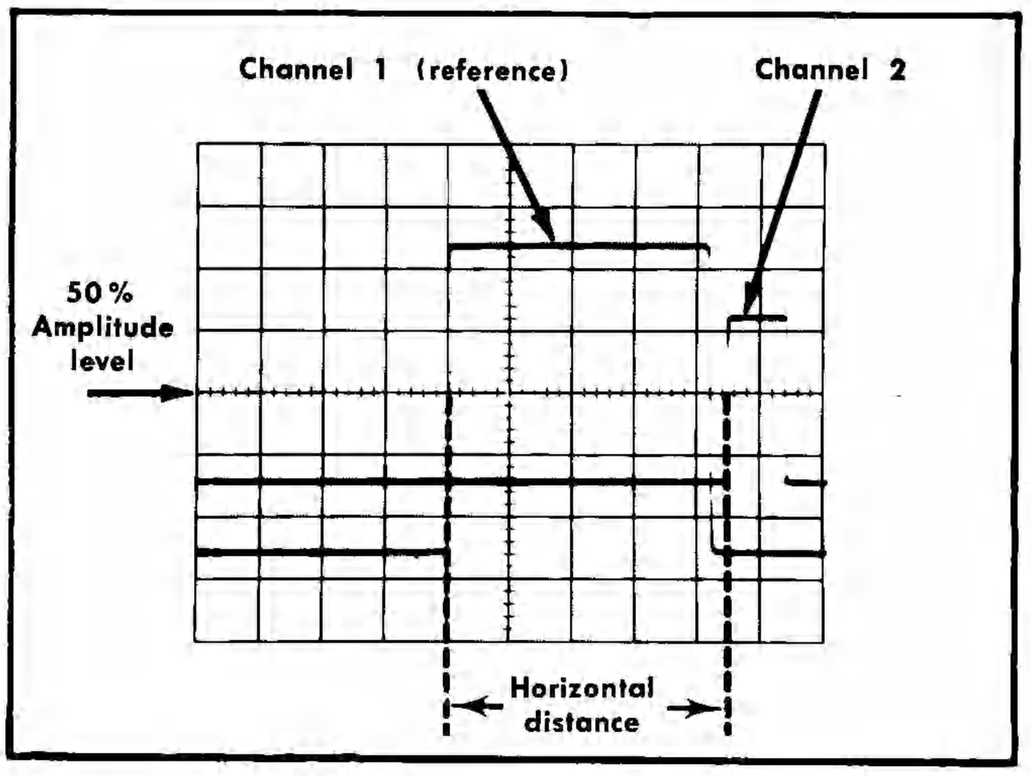

Fig. 2-6. Measuring time difference between two pulses.

3. Set the Triggering Mode switches to trigger the display on Channel 1 (or Left Plug-in).

4. Connect the reference signal to the Channel 1 input connector and the comparison signal to the Channel 2 input connector. The reference signal should precede the comparison signal in time. Use coaxial cables or probes which have similar time-delay characteristics to connect the signal to the input connectors.

5. If the signals are of opposite polarity, push the Invert button to invert the Channel 2 display. (Signals may be of opposite polarity due to 180° phase difference; if so, take this into account in the final calculation.)

6. Set the Volts/Div switches to produce about four divisions of displayed waveform.

7. Set the time-base triggering controls for a stable display. Set the Seconds/Div switch for a sweep rate which shows three or more divisions between the measurement points, if possible.

8. Adjust the vertical Position controls to bring the measurement points to the center horizontal reference line.

9. Adjust the horizontal Position control so the Channel 1 waveform (reference) crosses the center horizontal line at a vertical graticule line.

10. Measure the horizontal distance between the two measurement points (see Fig. 2-6).

11. Multiply the measured distance by the setting of the Seconds/Div switch.

EXAMPLE: Assume that the Seconds/Div switch is set to 50 μs and the horizontal distance between measurement points is four divisions.

Using the formula:

$$\text{Time Delay} = \text{Seconds/Div setting} \times \text{horizontal distance (divisions)}$$

$$= (50\ \mu s)\ (4) = 200\ \mu s.$$

The time delay is 200 microseconds.

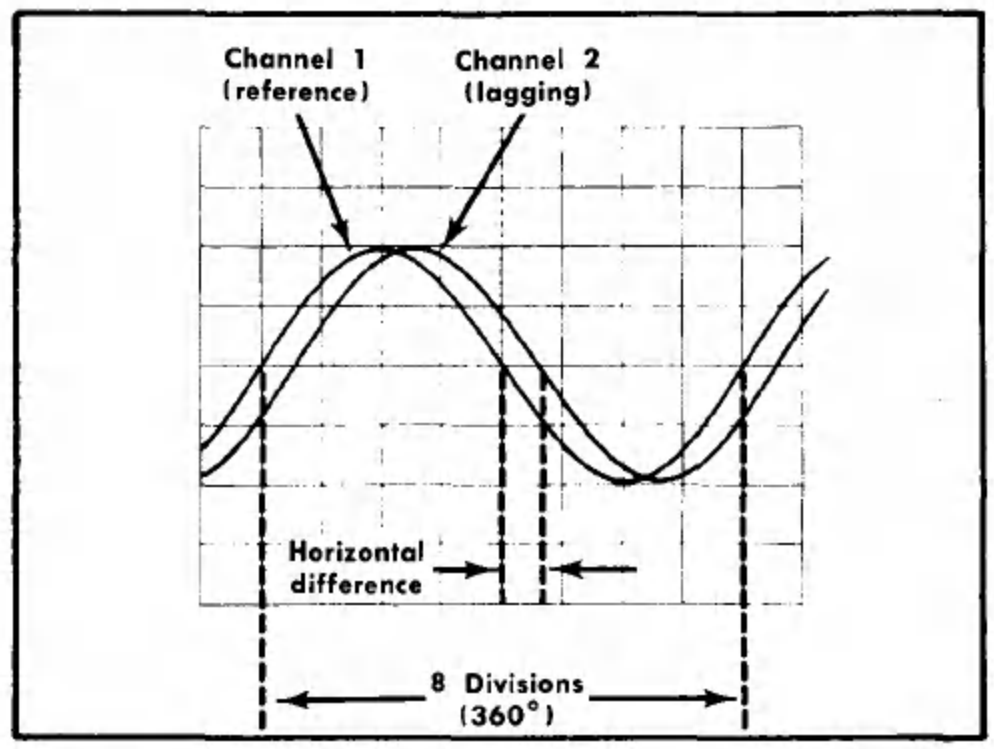

Fig. 2-7. Measuring phase difference.

Multi-Trace Phase Difference Measurement

Phase comparison between two or more signals of the same frequency can be made using a dual-trace plug-in or two single-trace plug-ins. This method of phase difference measurement can be used up to the frequency limit of the vertical system. To make the comparison, use the following procedure:

1. Set the Input Coupling switches of the amplifier channels to either AC or DC.

2. Set the Display Mode switch on the time-base unit to either Chop or Alt. In general, Chop is more suitable for low-frequency signals and the Alt position is more suitable for high-frequency signals. More information on determining the mode is given under Vertical Display Mode in this section.

3. Set the Triggering Mode switches to trigger the display on Channel 1 (or Left plug-in).

4. Connect the reference signal to the Channel 1 input connector and the comparison signal to the Channel 2 input connector. The reference signal should precede the comparison signal in time. Use coaxial cables or probes which have similar time-delay characteristics to connect the signals to the input connectors.

5. If the signals are of opposite polarity, push the Invert button to invert the Channel 2 display. (Signals may be of opposite polarity due to 180° phase difference; if so, take this into account in the final calculation.)

6. Set the Volts/Div switches and the Variable Volts/Div controls so the displays are equal and about five divisions in amplitude.

7. Set the time-base triggering controls to obtain a stable display. Set the Seconds/Div switch to a sweep rate which displays about one cycle of the waveform.

8. Move the waveforms to the center of the graticule with the vertical Position controls.

9. Turn the Variable Seconds/Div control until one cycle of the reference signal (Channel 1) occupies exactly eight divisions between the second and tenth vertical lines of the graticule (see Fig. 2-7). Each division of the graticule represents 45° of the cycle (360° + 8 divisions = 45°/division). The sweep rate can be stated in terms of degrees as 45°/division.

10. Measure the horizontal difference between corresponding points on the waveforms.

11. Multiply the measured distance (in divisions) by 45°/division (sweep rate) to obtain the exact amount of phase difference.

EXAMPLE: Assume a horizontal difference of 0.6 division with a sweep rate of 45°/division as shown in Fig. 2-7.

Using the formula:

$$\text{Phase Difference} = \text{horizontal difference (divisions)} \times \text{sweep rate (degrees/division)}$$

$$= (0.6)\ (45°) = 27°$$

The phase difference is 27°.

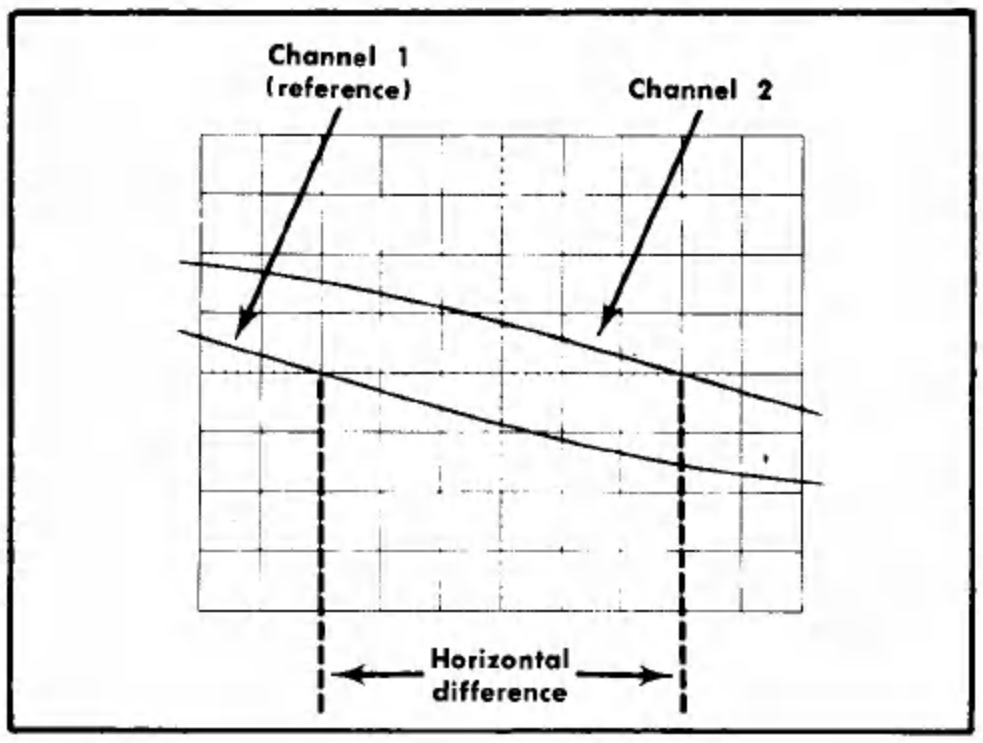

Fig. 2-8. High-resolution phase-difference measurement with increased sweep rate.

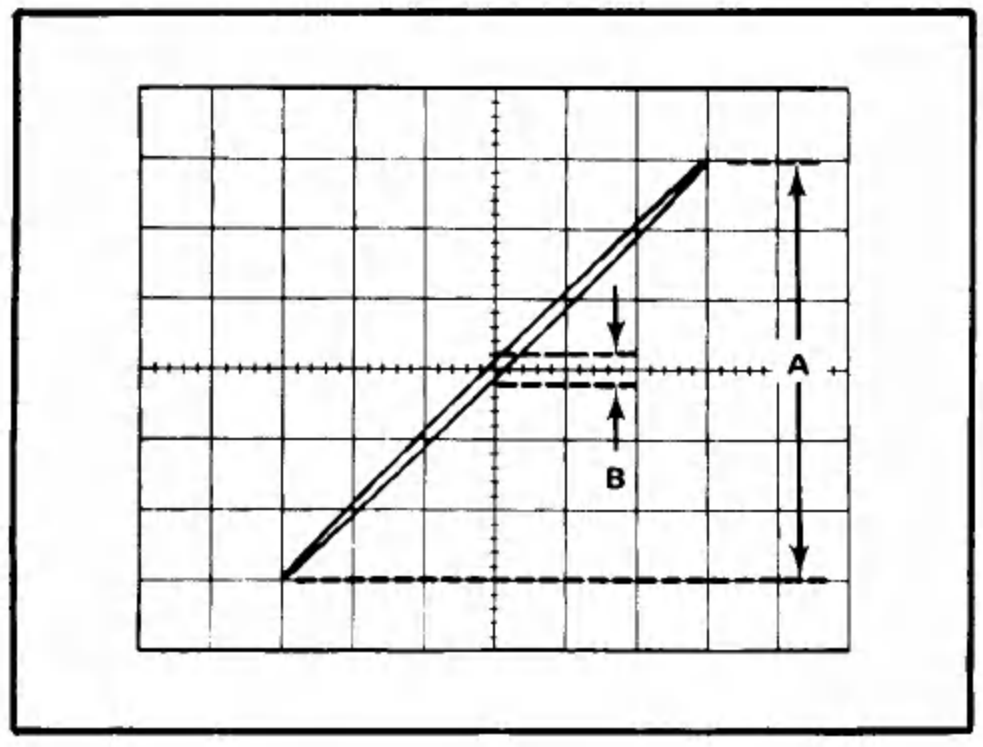

Fig. 2-9. Phase difference measurement from an X-Y display.

High Resolution Phase Measurements

More accurate dual-trace phase measurements can be made by increasing the sweep rate (without changing the Variable Seconds/Div control setting). One of the easiest ways to increase the sweep rate is with the SWP MAG (10X) button on the time-base unit. The magnified sweep rate is automatically indicated by the knob-skirt scale-factor readout.

EXAMPLE: If the sweep rate were increased 10 times with the magnifier, the magnified sweep rate would be 45°/division ÷ 10 = 4.5°/division. Fig. 2-8 shows the same signals as used in Fig. 2-7, but with the SWP MAG button pushed in. With a horizontal difference of six divisions, the phase difference is:

$$\text{Phase Difference} = \begin{matrix}\text{horizontal}\\ \text{difference}\\ \text{(divisions)}\end{matrix} \times \begin{matrix}\text{magnified}\\ \text{sweep rate}\\ \text{(degrees/division)}\end{matrix}$$

$$= (6)\ (4.5^\circ) = 27^\circ$$

The phase difference is 27°.

X-Y Phase Measurements

The X-Y phase measurement method can also be used to measure the phase difference between two signals of the same frequency. The phase angle is determined from the Lissajous pattern as outlined in the following steps:

1. Insert an amplifier plug-in unit into one of the vertical plug-in compartments and an amplifier of the same type into the horizontal plug-in compartment.

2. Connect a signal to the input connector of each plug-in and select the desired input coupling.

3. Position the display to the center of the screen and adjust the Volts/Div switches to produce a display six divisions vertically (Y) and six divisions horizontally (X).

4. Center the display in relation to the center vertical graticule line. Measure the distances A and B as shown in Fig. 2-9. Distance B is the vertical measurement between the two points where the trace crosses the center vertical line. Distance A is the maximum vertical amplitude of the display.

5. Divide B by A to obtain the sine of the phase angle (Φ) between the two signals. The angle can then be obtained from a trigonometric table. If the display appears as a diagonal straight line, the two signals are either in phase (tilted upper right to lower left), or 180° out of phase (tilted upper left to lower right). If the display is a circle, the signals are 90° out of phase. Fig. 2-10 shows the Lissajous displays produced between 0° and 360°. Notice that above 180° phase shift, the resultant display is the same as at some lower angle.

EXAMPLE: Assume a display as shown in Fig. 2-9 where A is 6 divisions and B is 0.4 division.

Using the formula:

$$\text{Sine } \Phi = \frac{B}{A} = \frac{0.4}{6} = 0.0667$$

From the trigonometric tables (or slide rule):

$$\Phi = \arcsin\ 0.0660 = 3.82^\circ$$

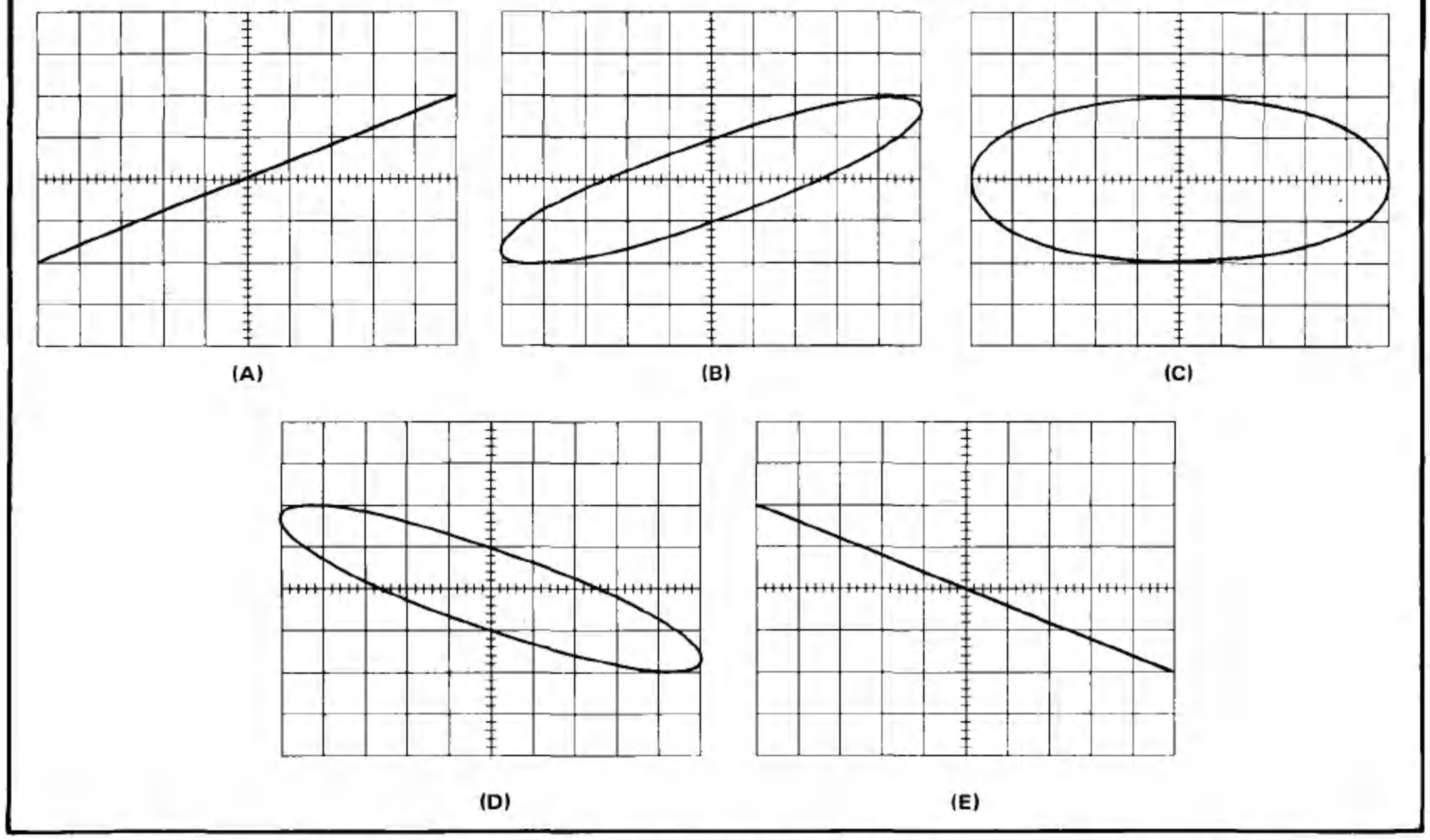

Fig. 2-10. Phase of a Lissajous display. (A) 0° or 360°, (B) 30° or 330°, (C) 90° or 270°, (D) 150° or 210°, and (E) 180°.

SECTION 3
CIRCUIT DESCRIPTION

Change information, if any, affecting this section will be found at the rear of this manual.

Introduction

This section of the manual contains an electrical description of the circuits in the 5103N Power Supply/ Amplifier unit, and discusses their relationship to the other instruments comprising the Oscilloscope System. An overall block diagram of the unit and complete schematics are given on pullout pages at the back of this manual.

BLOCK DIAGRAM DESCRIPTION

Vertical signals to be displayed on the cathode-ray tube are applied to the Interface circuit from both vertical plug-in compartments. With single-beam display units, the Interface circuit determines whether the signal from the left and/or right vertical unit is displayed; with dual-beam units, the Interface circuit establishes the proper routing to associate the left vertical plug-in signal with the upper CRT beam and right vertical plug-in signal with the lower CRT beam. The Vertical Amplifier circuit provides intermediate amplification between the vertical plug-in units and the deflection amplifiers in the display unit.

Time-base and external signals for horizontal display on the CRT are connected to the Interface circuit from the horizontal plug-in compartment. The Horizontal Amplifier circuit provides intermediate amplification between the horizontal plug-in unit and the deflection amplifier in the display unit.

Additionally, the Interface circuit provides an interconnection of logic levels, time-base triggering signals, display-related signals, and power-supply voltages between the plug-in units and the display unit.

The Low-Voltage Regulator circuits provide the voltage necessary for operation of the oscilloscope system. These voltages are connected to all circuits within the instrument. Also included in this circuit is the Calibrator, which produces a square-wave output with accurate amplitude at a repetition rate of twice the power-line frequency. This output signal is useful for calibration and probe compensation, and is available at the front panel of the display unit.

INTERFACE

General

The Interface circuit provides an interconnection of signals, logic levels, and power-supply voltages between plug-in units and the oscilloscope mainframe. It incorporates circuits that determine the vertical display mode and amplify the vertical and horizontal display signals. Functions of interconnections not discussed are labelled on the Interface diagram.

Clock Generator

The Clock Generator stage produces a 200-kilohertz timing signal (clock) for chopping between vertical plug-ins and amplifier channels within the plug-ins. This circuit consists of Q620, Q626, and their associated passive components, which are connected as a multivibrator. When the multivibrator receives a chop actuate level (+5 volts), it free runs at a 200-kilohertz rate. (The chop actuate level is routed through the vertical plug-ins to the time-base unit, and is present at contact A20 of J603 when a multi-trace display is required and the time-base Display switch is set to Chop.) The chop actuate level also disables Q630, locking out alternate-drive pulses. The Clock Generator has two outputs; one is sent to the Countdown circuit as a timing signal, and the other is sent to the CRT circuit in the display unit to blank the chop-switching transients.

Countdown Circuit

The Countdown produces the display switching signal for both the Alternate and Chopped switching modes. This circuit is composed of U640 and its discrete passive components, which are connected as a pair of RS flip-flops. Each flip-flop is a divide-by-two counter, and the first one drives the second. The Countdown Circuit is activated by a negative-going transition, which can come from either the Clock Generator or from the time-base plug-in unit via grounded-base amplifier Q630. The Clock Generator input results in chopped-mode vertical switching. The input from the time-base unit coincides with the end of each sweep, and results in alternate-mode vertical switching. The output from the divide-by-two portion of the Countdown Circuit (U640A-U640B) is sent via contacts B21 of J601 and J602 to the channel-switching circuits incorporated within dual-trace vertical plug-in units. The outputs from the divide-by-

four portion of the Countdown Circuit (U640C-U640D) are used for plug-in switching; one output is sent to contact A15 of J604 to produce plug-in switching on the single-beam-display auxiliary board, and the other output is sent via contact B21 of J603 to produce dual-sweep switching in dual time-base units. The vertical mode switching sequence and some of the display combination possibilities are fully discussed under General Operating Information in the Operating Instructions section of this manual.

Auxiliary Boards

Because switching between plug-ins is required for simultaneous viewing of displays on single-beam cathode-ray tubes and not required for use with dual-beam cathode-ray tubes, an auxiliary board is supplied with each display unit to provide the correct signal-routing function. An auxiliary board plugs into J604 on the Interface circuit board, and becomes part of the Interface circuit. The single-beam auxiliary board accepts the push-pull signal outputs from both vertical plug-ins. Emitter followers Q701, Q703, Q711, and Q713 provide a high-impedance input to two pairs of grounded-gate FET amplifiers, Q702-Q704 and Q712-Q714. The switching circuit consists of Q721 and Q722, connected as a comparator. Plug-in "on" logic levels are applied to the switching circuit in addition to the switching signal from the Countdown Circuit. The switching circuit permits only one pair of amplifiers to be on at a time, thus permitting only one of the two vertical plug-in signals to pass to the Vertical Amplifier. In the chopped switching mode, the switching between pairs of amplifiers occurs at a 50-kilohertz rate (switching occurs on both the negative- and positive-going transition), and in the alternate mode, switching occurs at the end of every second sweep. If no "on" logic level is applied to the switching circuit from either vertical plug-in, Q702 and Q704 will remain on, passing any signal from the left vertical plug-in.

The dual-beam auxiliary board has no switching circuit. It routes the signal from the left vertical plug-in to the Vertical Amplifier circuit on the Interface circuit board, and amplifies the signal from the right vertical plug-in. The amplifier circuit on the dual-beam auxiliary board is identical to the Vertical Amplifier which is discussed next, and consists of Q701, Q702, Q711, and Q712. The output of this amplifier is sent directly to the lower-beam deflection amplifier in the display unit.

Vertical Amplifier

The Vertical Amplifier circuit provides approximately 10X amplification of the vertical signal before passing it to the vertical deflection amplifier in the display unit. The Vertical Amplifier consists of Q650, Q658, Q660, Q668, and their associated passive components, connected in a differential configuration. The output signal is in phase with the output of the vertical plug-in.

Horizontal Amplifier

The Horizontal Amplifier consists of Q670, Q678, Q680, Q688, and their associated passive components. The circuit is nearly identical to the Vertical Amplifier just described. It receives a push-pull input directly from the horizontal plug-in compartment via contacts A7, A13, B7, and B13 of J603. The two halves of this amplifier are balanced in the quiescent condition by adjustment of R675, Horiz Cent. The output of the Horizontal Amplifier is sent to the horizontal deflection amplifier in the display unit.

POWER SUPPLY

General

The Power Supply circuit provides the low-voltage operating power for the oscilloscope system from three regulated supplies and three unregulated supplies. Electronic regulation is used to provide stable, low-ripple output voltages. The circuit also includes the calibrator circuit to produce an accurate square-wave output.

Power Input

Power is applied to the primary of transformer T801 through the display unit (fuse F201, thermal cutout S200, and Power switch S201), and the line-selector block, P810. The line-selector block allows changing the primary-winding taps of T801 to fit different line requirements.

Low-Voltage Rectifiers and Unregulated Outputs

The full-wave bridge rectifiers and associated filter components in the secondaries of T801 provide filtered DC voltages for operation of the oscilloscope system or for regulation by the Low-Voltage Regulators. The unregulated outputs are +200 volts, +38 volts, and −38 volts. The +205-volt and +38-volt outputs to the display unit are fuse-protected by F810 and F835 respectively.

Low-Voltage Regulators

−30-Volt Supply. The −30-Volt Supply, besides providing power to circuitry throughout the instrument, provides a reference-voltage source to establish operating levels for the feedback regulators in the +30-Volt and +5-Volt supplies. The regulator for the −30-Volt Supply is a feedback amplifier system which operates between ground and the unregulated −38 volts. Current to the load is delivered by the series-pass transistor, Q860, and the supply voltage is established by the drop across R877, R878, and R879. The feedback path is through R875, Q875, and Q865 to the base of Q860. Any variation in output voltage due to ripple, change of current through the load, etc., is immediately transmitted to the base of Q860 and nullified by a change in Q860 conduction, thus main-

taining a steady output. The output of the supply is set to exactly −30 volts by adjustment of R878, −30 V Adj. This control sets the conduction of Q870, which controls the bias levels of Q865 and Q860. CR865 and Q865 provide short-circuit protection by limiting the current through Q860.

+30-Volt Supply. The regulator for the +30-Volt Supply consists of series-pass transistor Q840 and error amplifier Q850. This is a feedback amplifier system similar to that just described for the −30-Volt Supply. R858, +30 V Adj, provides an adjustment to set the output of the supply at exactly +30 volts. Q845 protects the supply in the event the output is shorted by limiting the current demanded from the series-pass transistor under excessive load. During normal operation, Q845 is biased off.

+5-Volt Supply. The regulator for the +5-Volt Supply consists of series-pass transistor Q815 and error amplifier Q820. Operation of this feedback amplifier system is similar to that described for the −30-Volt Supply. The short-protection transistor, Q825, functions as described for Q845 in the +30-Volt Supply.

Line Trigger

A line-frequency signal is obtained from the secondary of T801 and attenuated by R830, R832, and R834 to provide a line-trigger source for the time-base plug-in unit.

CRT Heater Windings

Two separate secondary windings are provided for the CRT writing-gun heaters and the flood-gun heaters. The writing-gun heaters are elevated to −3500 volts in the CRT circuit (display unit) to maintain a potential near that of the CRT cathode.

Calibrator

The Calibrator circuit composed of Q885, Q890, and their associated passive components produces a square-wave output with accurate amplitude and at a rate of twice the power-line frequency. This output is available at the probe test loop on the display unit front panel as a 4-milliampere (peak to peak) square-wave current, or as a 400-millivolt (ground to peak) square-wave voltage.

The resistive-capacitive network at the base of Q885 receives a pulsating DC voltage from full-wave rectifier CR835-CR836 and produces a nearly symmetrical switching signal for Q885 and Q890. As Q890 is alternately switched on and off at twice the line frequency, current through R890 is alternately switched through the transistor or through CR890, the probe test loop, and R891, producing the required test signal.

NOTES

SECTION 4
SYSTEM MAINTENANCE

Change information, if any, affecting this section will be found at the rear of the manual.

Introduction

This section of the manual applies to all instruments in the 5100-series oscilloscope system, including display units and plug-in units. It contains information for preventive maintenance, troubleshooting, obtaining replacement parts, and replacing components and sub-assemblies.

5100 Panel Removal

WARNING

Dangerous potentials exist at several points throughout the oscilloscope. When the instrument must be operated with the cabinet panels removed, do not touch exposed connections or components. Some transistors have voltage present on their cases. Disconnect power before cleaning the instrument or replacing parts.

The cabinet panels of the 5100-series oscilloscope are held in place by slotted fasteners. To remove the panels, turn each fastener counterclockwise a quarter turn with a large screwdriver, coin, or similar device. Then the panels can be lifted away. The instrument should be operated with the panels in place to protect the interior from dust, and to eliminate shock hazard.

PREVENTIVE MAINTENANCE

General

Preventive maintenance, consisting of cleaning, visual inspection, etc., performed on a regular basis, will improve the reliability of the oscilloscope. Periodic checks of the semiconductor devices used in the system are not recommended as a preventive maintenance measure. See semiconductor-checking information given under troubleshooting. A convenient time to perform preventive maintenance is preceding instrument calibration.

Cleaning

CAUTION

Avoid the use of chemical cleaning agents which might damage plastic parts. Avoid chemicals containing benzene, toluene, xylene, acetone, or similar solvents.

Exterior. Loose dust may be removed with a soft cloth or a dry brush. Water and mild detergent may be used; however, abrasive cleaners should not be used.

Interior. Cleaning the interior of the unit should precede calibration, since the cleaning process could alter the settings of the calibration adjustments. Use low-velocity compressed air to blow off the accumulated dust. Hardened dirt can be removed with a soft, dry brush, cotton-tipped swab, or cloth dampened with a water and mild detergent solution.

Calibration

To ensure accurate measurements, the performance of individual units comprising the 5100-Series Oscilloscope should be checked periodically. Complete calibration instructions are given in the manuals for each unit.

The calibration procedure can be helpful in isolating major troubles in a unit. Moreover, minor troubles not apparent during regular operation may be revealed and corrected during calibration.

TROUBLESHOOTING

General

The following is provided to augment information contained elsewhere in this and in other manuals when troubleshooting the 5100-Series Oscilloscope or its plug-in units. The schematic diagrams, circuit description and calibration sections should be used to full advantage. The circuit description sections give detailed information about circuit behavior and output requirements.

Troubleshooting Aids

Diagrams. Circuit diagrams are given on foldout pages in the diagram section of each individual manual. The circuit number and electrical value of each component in this instrument system are shown on the diagrams (see first page

of each diagram section for definition of the reference designators used to identify components in each unit). Each main circuit is assigned a series of component numbers. Important voltages and waveforms are also shown on the diagrams. The portions of the circuits mounted on circuit boards are enclosed with blue lines.

Cam Switch Contact Identification. Cam switches shown on the diagrams are coded to indicate the position of the contact in the complete switch assembly counting from the front, or knob end of the switch, toward the rear. The contact closure chart given on the diagrams indicates when each contact is closed.

Circuit Boards. Pictures of the circuit boards are shown in the diagram sections. These pictures are located near their respective associated schematic diagrams to aid in cross reference between the diagrams and the circuit board pictures. Where applicable, circuit boards are identified by assembly numbers, which are used on the diagrams and in the parts lists to aid in locating the boards. Each electrical component on the boards is identified by its circuit number. The circuit boards are also outlined on the diagrams with a blue line to show which portions of the circuit are located on a circuit board.

Component and Wiring Color Code. Colored stripes or dots on resistors and capacitors signify electrical values, tolerances, etc., according to the EIA standard color code. Components not color coded usually have the value printed on the body.

WARNING

This color code applies to leads within the 5100-Series Oscilloscope system only. Color code of the AC power cord is:

Black	*Line*
White	*Neutral*
Green with a yellow stripe	*Safety Earth (ground)*

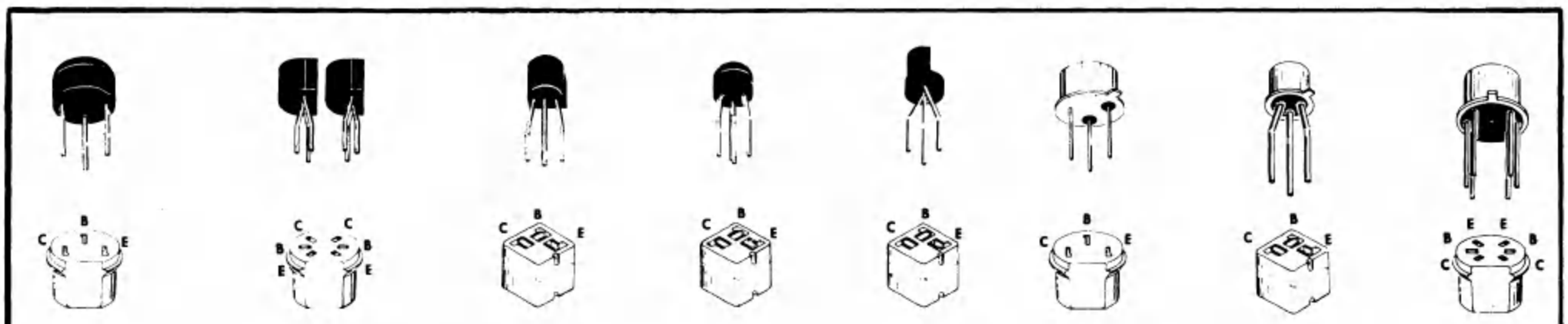

Fig. 4-1. Electrode configuration data for semiconductor devices.

Semiconductor Lead Configuration. Fig. 4-1 shows the lead configuration of the semiconductor devices used in this instrument.

Multi-Connector Holders. The multi-connector holder is keyed with two triangles, one on the holder and one on the circuit board. When a connection is made perpendicular to a circuit board surface, the orientation of the triangle and the slot numbers on the connector holder is determined by the direction of the nomenclature marking (see Fig. 4-2).

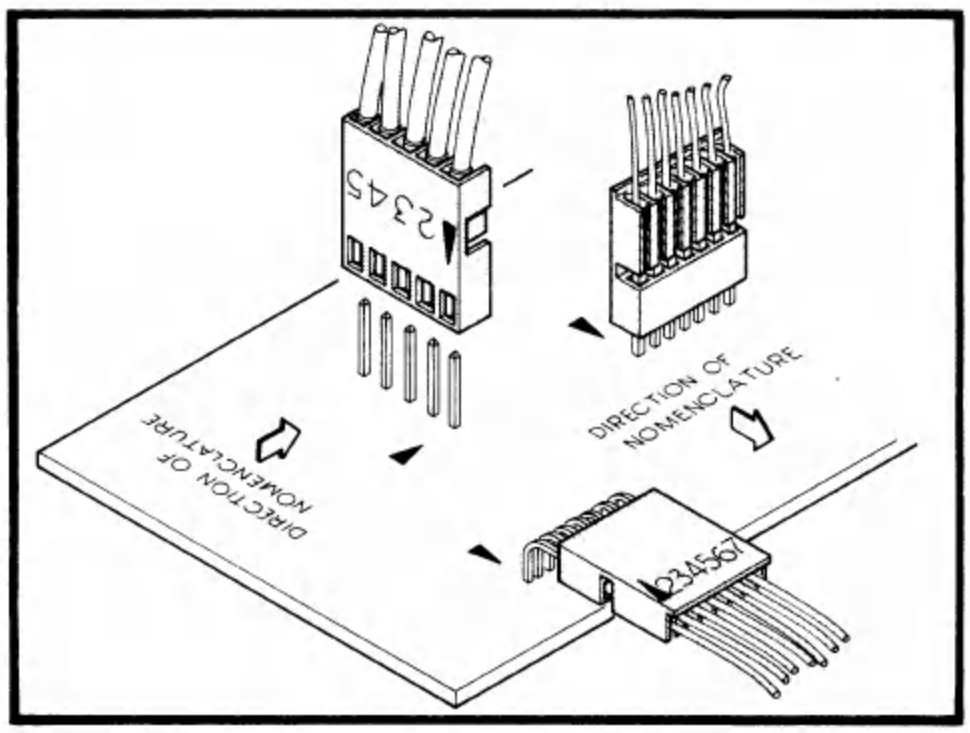

Fig. 4-2. Multi-connector holder orientation.

Troubleshooting Equipment

The following equipment is useful for troubleshooting the 5100-Series Oscilloscope and its plug-in units:

1. Semiconductor Tester

Description: Dynamic-type tester.

Purpose: To test the semiconductors used in this instrument system.

Recommended type: Tektronix Type 576 Transistor Curve Tracer or equivalent.

2. Multimeter

Description: VTVM, 10-megohm input impedance and 0 to 300 volts range, AC and DC; ohmmeter, 0 to 50 megohms. Accuracy, within 3%. Test probes must be insulated to prevent accidental shorting.

Purpose: To check voltages and for general troubleshooting in this instrument system.

NOTE

A 20,000 ohms/volt VOM can be used to check the voltages in this instrument if allowances are made for the circuit loading of the VOM at high-impedance points.

3. Test Oscilloscope

Description: Frequency response, DC to 2 megahertz minimum; deflection factor, 1 millivolt/division to 5 volts/division. A 10X, 10-megohm voltage probe should be used to reduce circuit loading for voltage measurements.

Purpose: To check operating waveforms in this instrument.

Troubleshooting Techniques

This troubleshooting procedure is arranged in an order which checks the simple trouble possibilities before proceeding with extensive troubleshooting. When a defective component is located, it should be replaced following the replacement procedure given under Component Replacement.

1. Check Control Settings. Incorrect control settings can indicate a trouble that does not exist. If there is any question about the correct function or operation of any control, see the operating instructions section of the manual for the instrument involved.

2. Check System and Associated Equipment. Before proceeding with troubleshooting of the 5100 system, check that the instruments in the system are operating correctly. Check for proper interconnection between the display unit and the power supply/amplifier unit. Check that the signal is properly connected and that the interconnecting cables or signal source are not defective. Also, check the power source. The associated plug-in units can be checked for proper operation by substituting other units which are known to be operating properly (preferably of the same types), or by interchanging plug-in units within the 5103N. If the trouble persists after substitution, the oscilloscope mainframe is probably at fault.

3. Visual Check. Visually check the portion of the instrument in which the trouble is suspected. Many troubles can be located by visual indications such as unsoldered connections, broken wires, damaged circuit board, damaged components, etc.

4. Check Instrument Calibration. Check the calibration of the 5100-Series Oscilloscope and its associated plug-ins, or check the affected circuit if the trouble appears in one circuit. The apparent trouble may only be a result of misadjustment or may be corrected by calibration. Complete calibration instructions are given in the calibration section of the manual for each instrument in the system.

5. Isolate the Trouble to a Circuit. To isolate trouble to a particular circuit, note the trouble symptom. The symptom often identifies the circuit in which the trouble is located. For example, poor focus indicates that the CRT circuit (includes high-voltage supplies) is probably at fault. When trouble symptoms appear in more than one circuit, check affected circuits by taking voltage and waveform readings.

Incorrect operation of all circuits often indicates trouble in the power supply. Check first for correct voltage of the individual supplies. However, a defective component elsewhere in the instrument can appear as a power-supply trouble and may also affect the operation of other circuits. Table 4-1 lists the tolerances of the power supplies in this instrument. These voltages are measured between the power-supply test points and ground on the Power Supply circuit board (see Fig. 5-1 in the calibration section of this manual for test point locations). If a power-supply voltage is within the listed tolerance, the supply can be assumed to be working correctly. If outside the tolerance, the supply may be misadjusted or operating incorrectly. Use the procedure given in the calibration section to adjust the power supplies.

TABLE 4-1

Power Supply Tolerances

Power Supply	Tolerance	Typical Ripple
+205 V	+180 V to +240 V	3 V or less
+30 V	+29.85 V to +30.15 V	3 mV or less
+5 V	+4.9 V to +5.1 V	2 mV or less
−30 V	−29.925 V to −30.075 V	2 mV or less

6. Check Voltages and Waveforms. Often the defective component can be located by checking for the correct voltage or waveform in the circuit. Typical voltages and waveforms are given on the diagrams.

NOTE

Voltages and waveforms given on the diagrams are not absolute and may vary slightly between instruments. To obtain operating conditions similar to those used to take these readings, see the first diagram page.

7. Check Individual Components. The following methods are provided for checking the individual components in the 5100-series instrument system. Components which are soldered in place are best checked by disconnecting one end, isolating the measurement from the effects of surrounding circuitry.

A. TRANSISTORS and INTEGRATED CIRCUITS

CAUTION

Power switch must be turned off before removing or replacing semiconductors.

A good check of transistor operation is actual performance under operating conditions. A transistor can most effectively be checked by substituting a new component for it (or one which has been checked previously). However, be sure that circuit conditions are not such that a replacement transistor might also be damaged. If substitute transistors are not available, use a dynamic tester. Static-type testers are not recommended, since they do not check operation under simulated operating conditions. A suction-type desoldering tool must be used to remove soldered-in transistors; see component replacement procedure for details.

Integrated circuits can be checked with a voltmeter, test oscilloscope, or by direct substitution. A good understanding of the circuit description is essential to troubleshooting circuits using IC's. Operating waveforms, logic levels, and other operating information for the IC's are given in the circuit description section of the appropriate manual. Use care when checking voltages and waveforms around the IC's so that adjacent leads are not shorted together. A convenient means of clipping a test probe to the 14— and 16—pin in-line IC's is with an integrated-circuit test clip. This device also doubles as an extraction tool.

B. DIODES

A diode can be checked for an open or for a short circuit by measuring the resistance between terminals with an ohmmeter set to the R X 1k scale. The diode resistance should be very high in one direction and very low when the meter leads are reversed. Do not check tunnel diodes or back diodes with an ohmmeter.

CAUTION

Do not use an ohmmeter that has a high internal current. High currents may damage the diode.

C. RESISTORS

Check the resistors with an ohmmeter. Resistor tolerance is given in the Electrical Parts List. Resistors normally do not need to be replaced unless the measured value varies widely from the specified value.

D. CAPACITORS

A leaky or shorted capacitor can be detected by checking resistance with an ohmmeter on the highest scale. Use an ohmmeter which will not exceed the voltage rating of the capacitor. The resistance reading should be high after initial charge of the capacitor. An open capacitor can best be detected with a capacitance meter, or by checking whether the capacitor passes AC signals.

8. Repair and Readjust the Circuit. Special techniques required to replace the components in this unit are given under Component Replacement. Be sure to check the performance of any circuit that has been repaired or that has had any electrical components replaced. Calibration of the affected circuit may be necessary.

REPLACEMENT PARTS

Standard Parts

All electrical and mechanical part replacements for the 5100-series oscilloscope system can be obtained through your local Tektronix Field Office or representative. However, many of the standard electronic components can be obtained locally in less time than is required to order them from Tektronix, Inc. Before purchasing or ordering replacement parts, check the parts lists for value, tolerance, rating, and description.

NOTE

When selecting replacement parts, it is important to remember that the physical size and shape of the component may affect its performance in the instrument. All replacement parts should be direct replacements unless it is known that a different component will not adversely affect the instrument performance.

Special Parts

Some parts are manufactured or selected by Tektronix to satisfy particular requirements, or are manufactured for Tektronix to our specifications. These special parts are indicated in the parts list by an asterisk preceding the part number. Most of the mechanical parts used in this system have been manufactured by Tektronix. Order all special parts directly from your local Tektronix Field Office or representative.

Ordering Parts

When ordering replacement parts from Tektronix, Inc., refer to the Parts Ordering Information and Special Notes and Symbols on the page immediately preceding each electrical parts list section. Include the following information:

1. Instrument Type (5103N, D10, 5A15N, etc.)

2. Instrument Serial Number

3. A description of the part (if electrical, include the circuit number)

4. Tektronix Part Number

COMPONENT REPLACEMENT

General

The exploded-view drawings associated with the mechanical parts lists (pullout pages) may be helpful when disassembling or re-assembling individual components or sub-assemblies.

Circuit Board Replacement

If a circuit board is damaged beyond repair, the entire assembly including all soldered-on components can be replaced. Part numbers are given in the mechanical parts lists for the completely wired (670 prefix) board.

To remove or replace a board, proceed as follows:

1. Disconnect all leads connected to the board (both soldered lead connections and solderless pin connections).

2. Remove all screws holding the board to the chassis or other mounting surface. Some boards may be held fast by plastic mounting clips around the board edges (for example, the H.V. board in the display modules). For these, push the mounting clips away from the circuit board edges to free the board. Also, remove any knobs, etc., that would prevent the board from being lifted out of the instrument.

3. Lift the circuit board out of the unit. Do not force or bend the board.

4. To replace the board, reverse the order of removal. Use care when replacing pin connectors; if forced into place incorrectly positioned, the pin connectors may be damaged.

Transistor and Integrated Circuit Replacement

Transistors and IC's should not be replaced unless they are actually defective. If removed from their sockets during routine maintenance, return them to their original sockets. Unnecessary replacement or switching of semiconductor devices may affect the calibration of the instrument. When a transistor is replaced, check the operation of the part of the instrument that may be affected.

CAUTION

POWER switch must be turned off before removing or replacing semiconductors.

Replacement semiconductors should be of the original type or a direct replacement. Fig. 4-1 shows the lead configuration of the semiconductors used in this instrument system. When removing soldered-in transistors, use a suction-type de-soldering tool to remove the solder from the holes in the circuit board.

An extracting tool should be used to remove the 14– and 16–pin integrated circuits to prevent damage to the pins. This tool is available from Tektronix, Inc. Order Tektronix Part No. 003-0619-00. If an extracting tool is not available, use care to avoid damaging the pins. Pull slowly and evenly on both ends of the IC. Try to avoid having one end of the IC disengage from the socket before the other end.

To replace one of the power transistors mounted on the chassis adjacent to the Power Supply circuit board, first unsolder the leads. Then, loosen the nuts on the plastic bar that clamps the transistor to the chassis. Remove the defective transistor. When replacing the transistor, use silicone grease on the metal tab to increase heat transfer from the transistor to the chassis.

Interconnecting Pin Replacement

NOTE

A pin replacement kit including necessary tools, instructions, and replacement pins is available from Tektronix, Inc. Order Tektronix Part No. 040-0542-00.

To replace a pin which is mounted on a circuit board, first disconnect any pin connectors. Then, unsolder the damaged pin and pull it out of the board with a pair of pliers. Be careful not to damage the wiring on the board with too much heat. Ream out the hole in the circuit board with a 0.031-inch drill. Remove the ferrule from the new interconnecting pin and press the new pin into the hole in the circuit board. Position the pin in the same manner as the old pin. If the old pin was bent at an angle to mate with a connector, bend the new pin to match the associated pins.

Switch Replacement

The following special maintenance information is provided for the cam-type switches and pushbutton switches used in this instrument system.

CAUTION

Repair of cam-type switches should be undertaken only by experienced maintenance personnel. Switch alignment and spring tension of the contacts must be carefully maintained for proper operation of the switch. For assistance in maintenance of the cam-type switches, contact your local Tektronix Field Office or representative.

A. CAM-TYPE SWITCHES

NOTE

A cam-type switch repair kit including necessary tools, instructions, and replacement contacts is available from Tektronix, Inc. Order Tektronix Part No. 040-0541-00.

The cam-type switches consist of rotating cam drums which are turned by front-panel knobs, and sets of spring-leaf contacts mounted on adjacent circuit boards. The contacts are actuated by lobes on the cams. In the 5100-Series Oscilloscope system, the Volts/Div and Seconds/Div switches are of the cam type. These switches can be disassembled for inspection, cleaning, repair, or replacement as follows:

1. Remove the screws which hold the metal cover on the switch, and lift the cover off the switch. The switch is now open for inspection or cleaning.

2. To completely remove a switch from the circuit board, first remove any knobs or shaft extensions. Loosen the coupling at the potentiometer at the rear of the switch, and pull the long shaft (with red knob attached) out of the switch assembly.

3. Remove the screws (from the opposite side of the circuit board) which hold the cam drum to the board.

4. To remove the cam drum from the front support block, remove the retaining ring from the shaft on the front of the switch and slide the cam drum out of the support block. Be careful not to lose the small detent roller.

5. To replace defective switch contacts, follow the instructions given in the switch repair kit.

6. To re-install the switch assembly, reverse the above procedure.

B. PUSHBUTTON SWITCHES

The pushbutton switches are not repairable and should be replaced as a unit if defective. Use a suction-type desoldering tool to remove solder from the holes in the circuit board when unsoldering the switches.

Cathode-Ray Tube Replacement

The following procedure outlines the removal and replacement of the cathode-ray tube. Refer to Fig. 4-3.

WARNING

Use care when handling a CRT. Protective clothing and safety glasses should be worn. Avoid striking it on any object which might cause it to crack or implode. When storing a CRT, place it in a protective carton or set it face down in a protected location on a smooth surface with a soft mat under the faceplate to protect it from scratches.

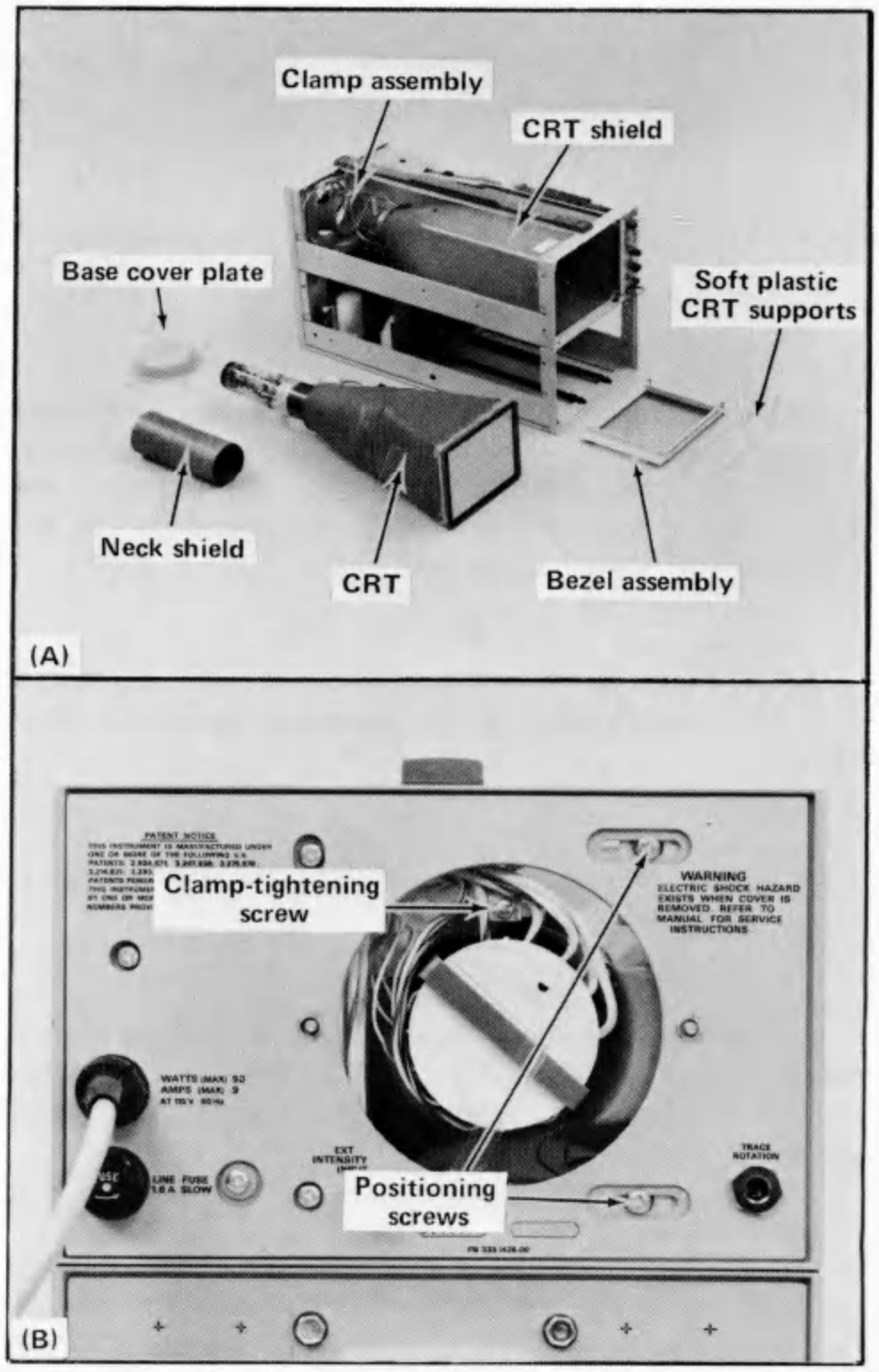

Fig. 4-3. Replacing the cathode-ray tube.

A. REMOVAL:

1. Remove the bezel assembly, which is held in place with two screws. (The bezel assembly includes a snap-in implosion shield.)

2. For storage CRT's (D11, D13), disconnect the storage-element cable connector from the Storage circuit board. For dual-beam CRT's (D12, D13), disconnect deflection leads from neck pins.

NOTE

The red and black wires entering the CRT shield are connected to the trace-rotation coil inside the shield. They will not hamper CRT removal and need not be unsoldered.

3. Remove the CRT base cover on the rear panel of the instrument.

4. Remove the CRT base socket.

5. Loosen the CRT clamp. The CRT and neck portion of the shield will be removed as a unit, and to facilitate removal, it may be best to remove all hardware from the CRT clamp (bracket and positioning screws, and clamp-tightening hardware).

6. With one hand on the CRT faceplate, push on the CRT base (and neck shield). Slide the CRT and neck shield forward, and at the same time feed the storage-element

cable through the slot in the main portion of the CRT shield. Pull the CRT out of the instrument from the front, then remove the neck shield.

B. REPLACEMENT:

1. Slide the neck shield onto the CRT neck.

2. Make sure the soft plastic CRT faceplate supports are in place, then insert the CRT into the main shield while feeding the storage-element cable through the slot in the shield. Before the CRT is completely inserted, slide the CRT clamp over the neck shield.

3. With the CRT fully inserted and loose in the shield, mount the bezel assembly into place and tighten the bezel screws.

4. Mount the CRT clamp and positioning hardware, temporarily leaving it loose.

5. Position the rear of the CRT (socket end) so there is no tilt of the faceplate in relation to the bezel assembly. Tighten the positioning screws, then tighten the clamp hardware.

6. Place the CRT base socket onto the CRT base pins. Replace the cover. If applicable, connect the storage-element cable to the pin connectors on the Storage circuit board, and connect the deflection leads to the CRT neck pins.

7. Replacing the CRT will require partial instrument recalibration. Refer to the calibration section of the display unit manual.

Neon Bulb Replacement

To replace the knob-skirt deflection-factor readout bulbs, proceed as follows:

1. Remove the light shield.

2. Unsolder the defective bulb, and install its replacement.

3. Replace the light shield.

Power Transformer Replacement

Replace the power transformer only with a direct replacement Tektronix transformer. After the transformer has been replaced, check the power supply output voltages as outlined in the calibration section of this manual. Also, check the CRT operation as outlined in the calibration section of the display unit manual.

Fuse Replacement

Table 4-3 gives the rating, location, and function of the fuses used in this instrument system.

TABLE 4-1

Circuit Number	Rating	Function	Location
F20, F206	1/16 A Fast	Input Protection	5A20N/5A21N circuit board
F201	1.6 A Fast	Line-Voltage Input	Display unit rear panel
F810	0.25 A Fast	+205 V Unreg supply	5103N Power Supply board
F835	0.5 A Fast	+38 V Unreg supply	5103N Power Supply board

RECALIBRATION AFTER REPAIR

After any electrical component has been replaced, the calibration of that particular circuit should be checked, as well as the calibration of other closely related circuits. The Performance Check instructions in each manual provide a quick and convenient means of checking the instrument operation.

SECTION 5
CALIBRATION

Change information, if any, affecting this section will be found at the rear of the manual.

Introduction

Before complete calibration, thoroughly clean and inspect this instrument as outlined in the Maintenance section of this manual.

NOTE

This procedure facilitates checking and adjusting the Low-Voltage Power Supply ONLY. For complete oscilloscope mainframe calibration (plug-in interface, deflection amplifiers, CRT circuits, etc.), refer to the calibration procedure given in the manual for the display unit.

Services Available

Tektronix, Inc. provides complete instrument repair and calibration at local Field Service Centers and at the Factory Service Center. Contact your local Tektronix Field Office or representative for further information.

Equipment Required

For power-supply calibration, proper loading must be established to ensure correct operation and regulation of the low-voltage supplies. For best results, the 5103N should be operated with a display unit and plug-in units because this provides actual operating-condition loads for the supplies.

For measurement of the supply voltages, a precision DC voltmeter is required. The voltmeter must have an accuracy of within ±0.1%, and a measurement range from about −35 volts to +250 volts. For example, a Fairchild Model 7050 Digital Multimeter, a Tektronix 7D13 Digital Multimeter (operated with a Tektronix 7000-Series Readout Oscilloscope), or any DC voltmeter meeting the listed requirements may be used.

Preliminary Procedure

NOTE

The performance of this instrument can be checked at any temperature within the 0°C to +50°C range. Make any adjustments at a temperature of +25°C, ±5°C.

a. Remove the bottom dust cover of the 5103N to gain access to the power supply circuit board. If necessary, set the line-selector block in accordance with the line voltage source to be used (see Section 2, Operating Voltage, in this manual for complete instructions).

b. Connect the 5103N to the line voltage source. Turn the Intensity control on the display unit counterclockwise and pull the Power switch out to turn the instrument on.

c. Allow a 20 minute warm up time before performing the calibration procedure.

Location of the power-supply test points and calibration adjustments is shown in Fig. 5-1. Table 5-1 shows the tolerances of the low-voltage supplies.

TABLE 5-1

Supply	Tolerance
−30 V	−29.925 V to −30.075 V
+5 V	+4.9 V to +5.1 V
+30 V	+29.85 V to +30.15 V
+205 V	+180 V to +240 V

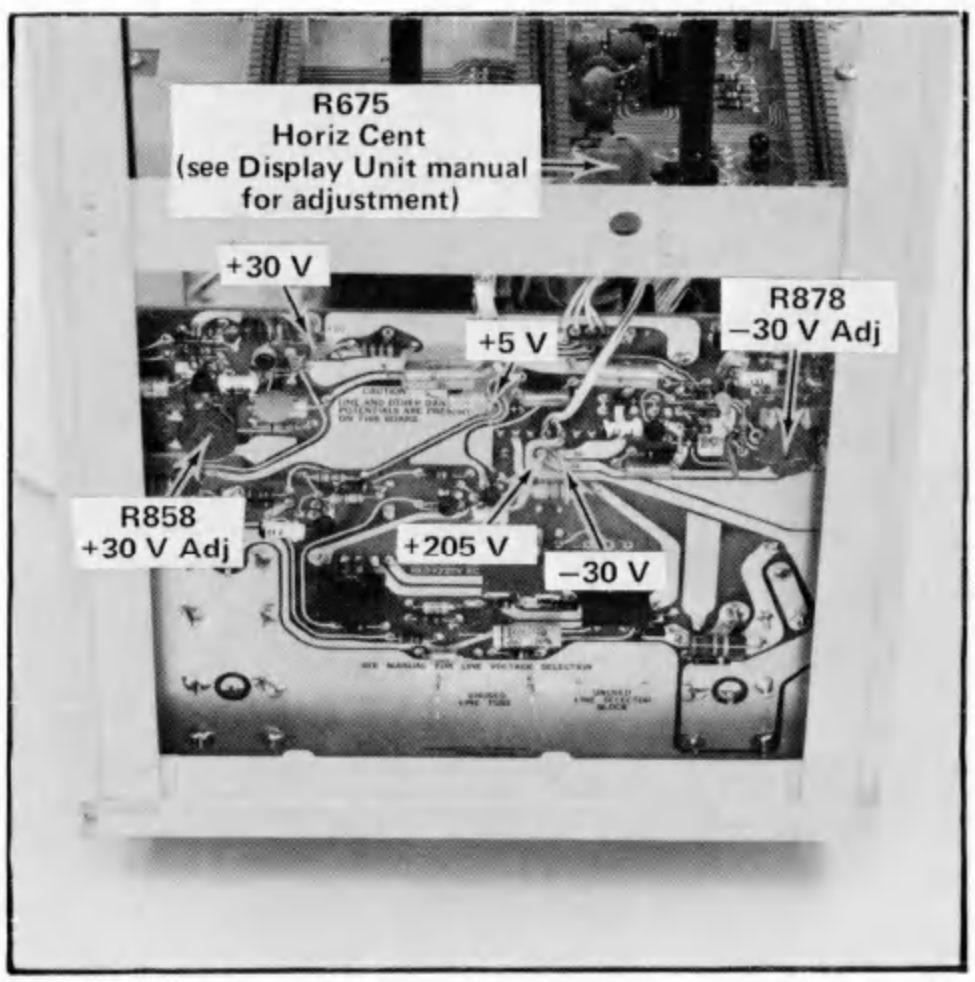

Fig. 5-1. Locations of power-supply test points and adjustment controls.

1. Power Supply Checks

a. Connect the precision DC voltmeter between each low-voltage test point and ground.

b. CHECK—Each supply is within the tolerance listed in Table 5-1.

2. Power Supply Voltage Adjustments

a. Connect the precision DC voltmeter between each test point (−30 V and +30 V) and ground.

b. ADJUST—R878, −30 V ADJ, and R858, +30 V ADJ, respectively, for voltmeter readings of exactly 30 volts.

This completes the Power Supply calibration for the 5103N.

SECTION 6
RACKMOUNTING

Change information, if any, affecting this section will be found at the rear of the manual.

Introduction

The R5100-Series Oscilloscope is designed for operation in a standard 19-inch wide rack which has Universal, EIA, RETMA, or Western Electric hole spacing. When properly mounted, this instrument will meet all electrical and environmental specifications given in Section 1.

Instrument Conversion

The 5100-Series Oscilloscope can quickly be converted from a bench model to a rackmount model, or vice versa. Field conversion kits, including the necessary tools, parts, and instructions are available from Tektronix, Inc. Order: 040-0583-00, Bench-to-rack conversion; 040-0584-00, Rack-to-bench conversion.

Mounting Method

This instrument will fit most 19-inch wide racks whose front and rear holes conform to Universal hole spacing. The slide-out tracks easily mount to the cabinet rack front and rear vertical mounting rails if the inside distance between the front and rear rails is within 10-9/16 inches to 24-3/8 inches. If the inside distance exceeds 24-3/8 inches, some means of support is required for the rear ends of the slide-out tracks (for example, make extensions for the rear mounting brackets).

Rack Dimensions

Height. At least 5-1/4 inches of vertical space is required to mount this instrument in a rack. If other instruments are operated in the rack, an additional 1/4 inch is required both above and below the R5100 to allow space for proper circulation of cooling air.

Width. A standard 19-inch wide rack may be used. The dimension of opening between the front rails must be at least 17-5/8 inches for a cabinet in which the front lip of the stationary section is mounted behind an untapped front rail as shown in Fig. 6-1A. If the front rails are tapped, and the stationary section is mounted in front of the front rail as shown in Fig. 6-2B, the dimension between the front rails should be at least 17-3/4 inches. These dimensions allow room on each side of the instrument for the slide-out tracks to operate so the instrument can move freely in and out of the rack.

Depth. For proper circulation of cooling air, allow at least two inches clearance behind the rear of the instrument and any enclosure on the rack. If it is sometimes necessary or desirable to operate the R5100 in the fully extended position, use cables that are long enough to reach from the signal source to the instrument.

Installing the Slide-Out Tracks

General Information. The slide-out tracks for the instrument consist of two assemblies, one for the left side of the instrument and one for the right side. Each assembly consists of three sections. A stationary section attaches to the front and rear rails of the rack, the chassis section attaches to the instrument (and is installed at the factory), and the intermediate section fits between the other two sections to allow the instrument to fully extend out of the rack.

The small hardware components included with the slide-out track assemblies are used to mount the tracks to the vertical rack rails having this compatibility:

1. Front and rear rail holes must be large enough to allow inserting a 10-32 screw through the rail mounting hole if the rails are untapped (see Fig. 6-1A).

2. Or, front and rear rail holes must be tapped to accept a 10-32 screw if Fig. 6-1B mounting method is used. Note in Fig. 6-1B right illustration that a #10 washer (not supplied) may be added to provide increased bearing surface for the slide-out track stationary section front flange.

3. Front and rear rail holes must be located on Universal spacing; that is, the sequence for the hole spacing is 1/2 inch, 5/8 inch, 5/8 inch, 1/2 inch, etc.

Because of the above compatibility, there will be some small parts left over. The stationary and intermediate sections for both sides of the rack are shipped as a matched set and should not be separated. The matched sets of both sides including hardware are marked 351-0195-00 on the package. To identify the assemblies, note that the automatic latch and intermediate section stop is located near the top of the matched set.

Mounting Procedure. Use the following procedure to mount both sides. See Fig. 6-1 for installation details.

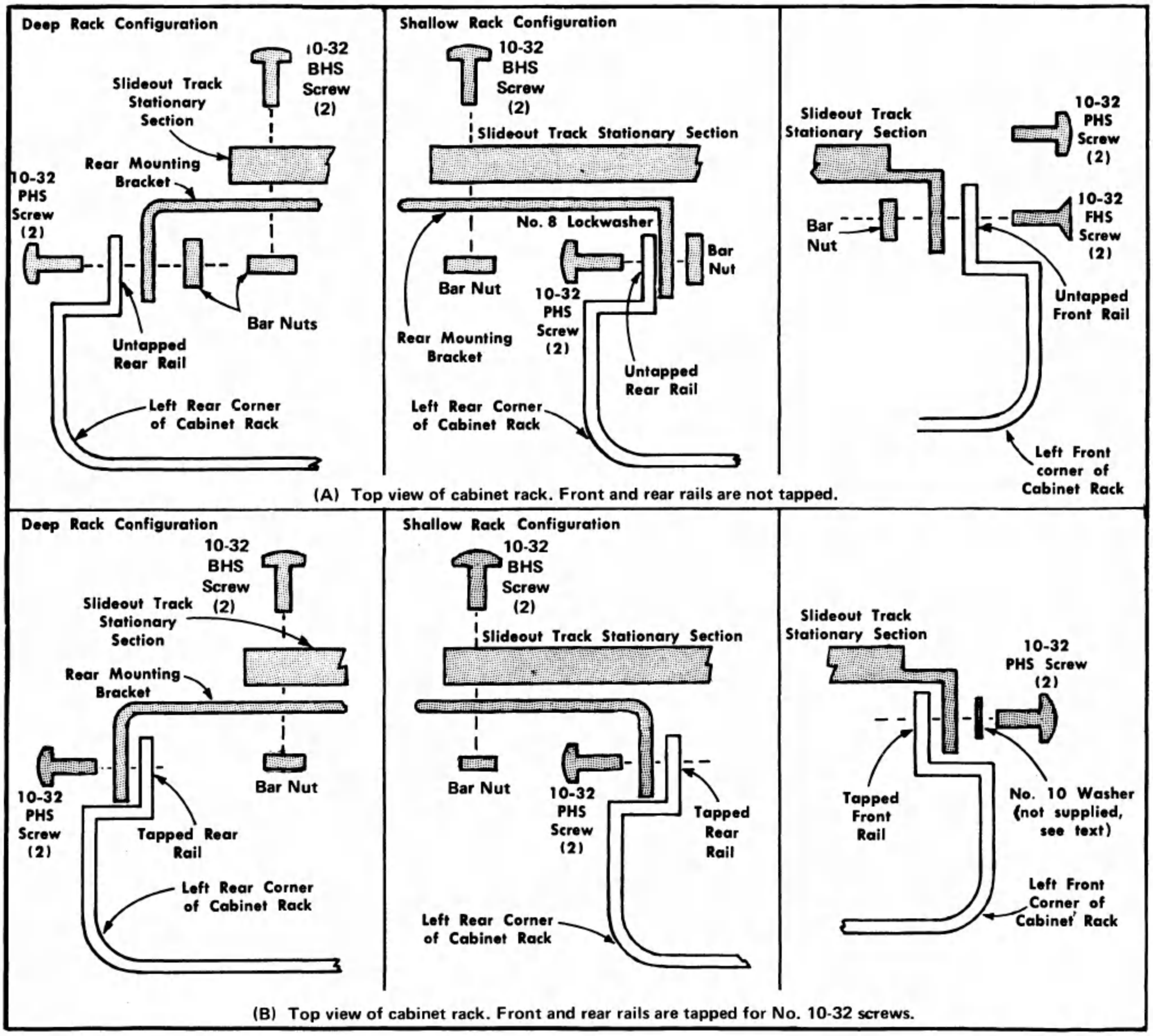

Fig. 6-1. Mounting the left stationary section (with its matched intermediate section, not shown in illustrations A and B) to the rack rails.

1. To mount the instrument directly above or below another instrument in a cabinet rack, select the appropriate holes in the front rack rails for the stationary sections, using Fig. 6-2 as a guide.

2. Mount the stationary slide-out track sections to the front rack rails using either of these methods:

(a) If the front flanges of the stationary sections are to be mounted behind the front rails (rails are countersunk or not tapped), mount the stationary sections as shown in Fig. 6-1A right illustration.

(b) If the front flanges of the stationary sections are to be mounted in front of the front rails (rails are tapped for 10-32 screws), mount the stationary sections as shown in Fig. 6-1B right illustration. To provide increased bearing surface for the screw head to securely fasten the front flange to the rail, a flat washer (not supplied) may be added under the screw head. However, consider that when this mounting method is used, the front panel will not fit flush against the front rail because of the stationary section and washer thickness. If a flush fit is preferred, method 2 (a) should be used.

3. Mount the stationary slide-out sections to the rear rack rails using either of these methods:

(a) If the rear rack rail holes are not tapped to accept 10-32 machine screws, mount the left stationary section

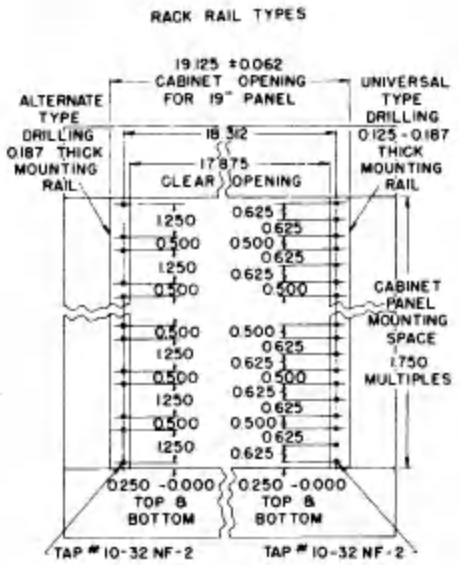

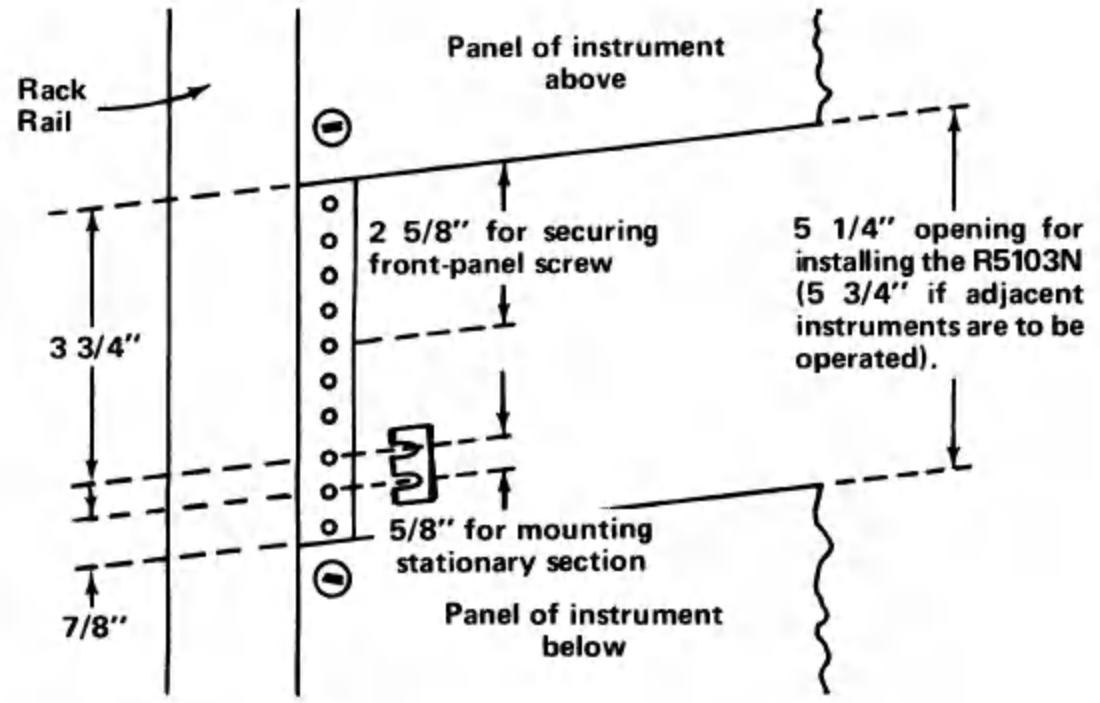

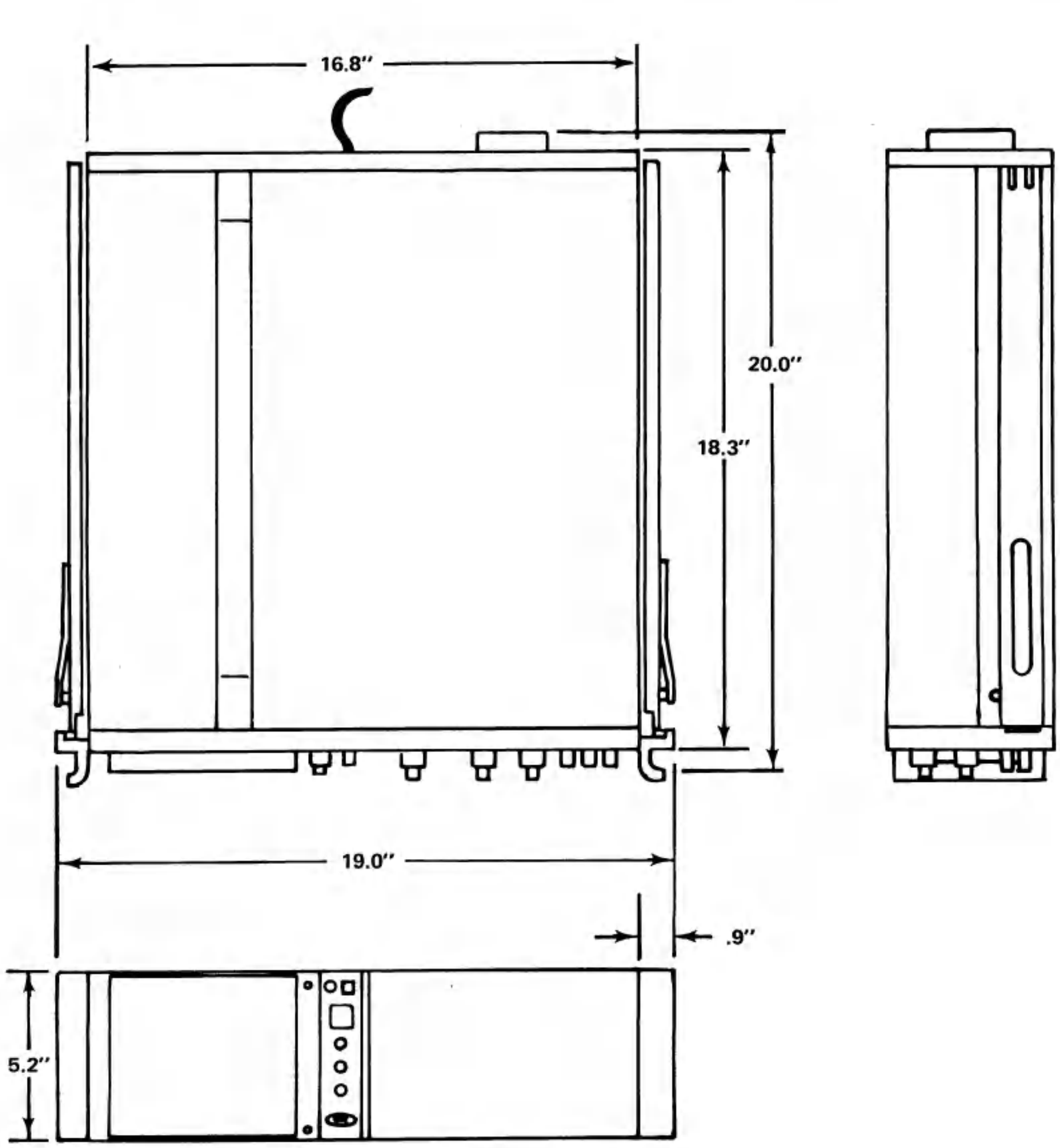

Fig. 6-2. Dimensional diagram.

with hardware provided as shown in the left or center illustration of Fig. 3-1A. Note that the rear mounting bracket can be installed either way so the slide-out tracks will fit a deep or shallow cabinet rack. Use Fig. 3-1A as a guide for mounting the right stationary section. Make sure the stationary sections are horizontally aligned so they are level and parallel with each other.

(b) If the rear rack rail holes are tapped to accept 10-32 machine screws, mount the left stationary section with hardware provided as shown in the left or center illustration of Fig. 6-1B. Note that the rear mounting bracket can be installed either way so the slide-out tracks will fit a deep or shallow cabinet rack. Use Fig. 6-1B as a guide for mounting the right stationary section. Make sure the stationary sections are horizontally aligned so they are level and parallel with each other.

R5100 Installation and Adjustment

To insert the instrument into the rack, proceed as follows:

1. Pull the slide-out track intermediate sections out to the fully extended position.

2. Insert the instrument chassis sections into the intermediate sections.

3. Press the stop latches on the chassis sections and push the instrument toward the rack until the latches snap into their holes.

4. Again press the stop latches and push the instrument into the rack.

To adjust the slide-out tracks for smooth sliding action, loosen the screws used to join the stationary sections to the rails of the rack. Center the instrument, allowing the slide-out tracks to seek the proper width, then tighten the screws.

Maintenance

The slide-out tracks require no lubrication. The special dark gray finish on the sliding parts is a permanent lubrication.

REPLACEABLE ELECTRICAL PARTS

PARTS ORDERING INFORMATION

Replacement parts are available from or through your local Tektronix, Inc. Field Office or representative.

Changes to Tektronix instruments are sometimes made to accommodate improved components as they become available, and to give you the benefit of the latest circuit improvements developed in our engineering department. It is therefore important, when ordering parts, to include the following information in your order: Part number, instrument type or number, serial number, and modification number if applicable.

If a part you have ordered has been replaced with a new or improved part, your local Tektronix, Inc. Field Office or representative will contact you concerning any change in part number.

Change information, if any, is located at the rear of this manual.

SPECIAL NOTES AND SYMBOLS

X000	Part first added at this serial number
00X	Part removed after this serial number

ITEM NAME

In the Parts List, an Item Name is separated from the description by a colon (:). Because of space limitations, an Item Name may sometimes appear as incomplete. For further Item Name identification, the U.S. Federal Cataloging Handbook H6-1 can be utilized where possible.

ABBREVIATIONS

ACTR	ACTUATOR	PLSTC	PLASTIC
ASSY	ASSEMBLY	QTZ	QUARTZ
CAP	CAPACITOR	RECP	RECEPTACLE
CER	CERAMIC	RES	RESISTOR
CKT	CIRCUIT	RF	RADIO FREQUENCY
COMP	COMPOSITION	SEL	SELECTED
CONN	CONNECTOR	SEMICOND	SEMICONDUCTOR
ELCTLT	ELECTROLYTIC	SENS	SENSITIVE
ELEC	ELECTRICAL	VAR	VARIABLE
INCAND	INCANDESCENT	WW	WIREWOUND
LED	LIGHT EMITTING DIODE	XFMR	TRANSFORMER
NONWIR	NON WIREWOUND	XTAL	CRYSTAL

CROSS INDEX—MFR. CODE NUMBER TO MANUFACTURER

Mfr. Code	Manufacturer	Address	City, State, Zip
01121	ALLEN-BRADLEY COMPANY	1201 2ND STREET SOUTH	MILWAUKEE, WI 53204
04222	AVX CERAMICS, DIVISION OF AVX CORP.	P O BOX 867, 19TH AVE. SOUTH	MURTLE BEACH, SC 29577
04713	MOTOROLA, INC., SEMICONDUCTOR PROD. DIV.	5005 E MCDOWELL RD,PO BOX 20923	PHOENIX, AZ 85036
05574	VIKING INDUSTRIES, INC.	21001 NORDHOFF STREET	CHATSWORTH, CA 91311
07263	FAIRCHILD SEMICONDUCTOR, A DIV. OF FAIRCHILD CAMERA AND INSTRUMENT CORP.	464 ELLIS STREET	MOUNTAIN VIEW, CA 94042
07910	TELEDYNE SEMICONDUCTOR	12515 CHADRON AVE.	HAWTHORNE, CA 90250
56289	SPRAGUE ELECTRIC CO.		NORTH ADAMS, MA 01247
71400	BUSSMAN MFG., DIVISION OF MCGRAW-EDISON CO.	2536 W. UNIVERSITY ST.	ST. LOUIS, MO 63107
71450	CTS CORP.	1142 W. BEARDSLEY AVE.	ELKHART, IN 46514
72982	ERIE TECHNOLOGICAL PRODUCTS, INC.	644 W. 12TH ST.	ERIE, PA 16512
75042	TRW ELECTRONIC COMPONENTS, IRC FIXED RESISTORS, PHILADELPHIA DIVISION	401 N. BROAD ST.	PHILADELPHIA, PA 19108
76055	MALLORY CONTROLS, CO., DIV. OF MALLORY P. R., AND CO., INC.	STATE RD. 28 W., P O BOX 327	FRANKFORT, IN 46041
80009	TEKTRONIX, INC.	P. O. BOX 500	BEAVERTON, OR 97077
81483	INTERNATIONAL RECTIFIER CORP.	9220 SUNSET BLVD.	LOS ANGELES, CA 90069
91637	DALE ELECTRONICS, INC.	P. O. BOX 609	COLUMBUS, NE 68601
95238	CONTINENTAL CONNECTOR CORP.	34-63 56TH ST.	WOODSIDE, NY 11377

Ckt No.	Tektronix Part No.	Serial/Model No. Eff	Dscont	Name & Description	Mfr Code	Mfr Part Number
				CHASSIS		
Q815	151-0331-00	B010100	B070028	TRANSISTOR:SILICON,NPN	80009	151-0331-00
Q815	151-0496-00	B070029		TRANSISTOR:SILICON,NPN	80009	151-0496-00
Q840	151-0331-00	B010100	B070028	TRANSISTOR:SILICON,NPN	80009	151-0331-00
Q840	151-0496-00	B070029		TRANSISTOR:SILICON,NPN	80009	151-0496-00
Q860	151-0331-00	B010100	B070028	TRANSISTOR:SILICON,NPN	80009	151-0331-00
Q860	151-0496-00	B070029		TRANSISTOR:SILICON,NPN	80009	151-0496-00
T801	120-0692-00	B010100	B049999	XFMR,PWR STPDN:	80009	120-0692-00
T801	120-0704-00	B050000		XFMR,PWR SDN/SU:50-400Z	80009	120-0704-00
				A1 INTERFACE CIRCUIT CARD ASSEMBLY		
	670-1340-00			COMPLETE CARD:	80009	670-1340-00
C622	283-0032-00			CAP.,FXD,CER DI:470PF,5%,500V	72982	831-500Z5D471J
C628	283-0060-00			CAP.,FXD,CER DI:100PF,5%,200V	72982	855-535U2J101J
C632	283-0002-00			CAP.,FXD,CER DI:0.01UF,+80-20%,500V	72982	811-546E103Z
C634	283-0060-00			CAP.,FXD,CER DI:100PF,5%,200V	72982	855-535U2J101J
C636	283-0060-00			CAP.,FXD,CER DI:100PF,5%,200V	72982	855-535U2J101J
C640	281-0519-00			CAP.,FXD,CER DI:47PF,+/-4.7PF,500V	72982	308-000C0G0470K
C642	281-0519-00			CAP.,FXD,CER DI:47PF,+/-4.7PF,500V	72982	308-000C0G0470K
C659	283-0000-00			CAP.,FXD,CER DI:0.001UF,+100-0%,500V	72982	831-516E102P
C671	281-0593-00	B010100	B029999X	CAP.,FXD,CER DI:3.9PF,10%,500V	72982	301-000C0J0399C
C679	283-0000-00			CAP.,FXD,CER DI:0.001UF,+100-0%,500V	72982	831-516E102P
CR620	152-0185-00	B010100	B049999	SEMICOND DEVICE:SILICON,40PIV,150MA	07910	1N4152
CR620	152-0141-02	B050000		SEMICOND DEVICE:SILICON,30V,150MA	07910	1N4152
CR658	152-0185-00	B010100	B049999	SEMICOND DEVICE:SILICON,40PIV,150MA	07910	1N4152
CR658	152-0141-02	B050000		SEMICOND DEVICE:SILICON,30V,150MA	07910	1N4152
CR668	152-0185-00	B010100	B049999	SEMICOND DEVICE:SILICON,40PIV,150MA	07910	1N4152
CR668	152-0141-02	B050000		SEMICOND DEVICE:SILICON,30V,150MA	07910	1N4152
CR678	152-0185-00	B010100	B049999	SEMICOND DEVICE:SILICON,40PIV,150MA	07910	1N4152
CR678	152-0141-02	B050000		SEMICOND DEVICE:SILICON,30V,150MA	07910	1N4152
CR688	152-0185-00	B010100	B049999	SEMICOND DEVICE:SILICON,40PIV,150MA	07910	1N4152
CR688	152-0141-02	B050000		SEMICOND DEVICE:SILICON,30V,150MA	07910	1N4152
J601	131-1078-00			CONNECTOR,RCPT,:28/56 CONTACT	95238	K600-11-56Y25
J602	131-1078-00			CONNECTOR,RCPT,:28/56 CONTACT	95238	K600-11-56Y25
J603	131-1078-00			CONNECTOR,RCPT,:28/56 CONTACT	95238	K600-11-56Y25
J604	131-1043-00			CONNECTOR,RCPT,:18/36	05574	2VK18D/2-2
Q620	151-0190-00			TRANSISTOR:SILICON,NPN	80009	151-0190-00
Q626	151-0190-00			TRANSISTOR:SILICON,NPN	80009	151-0190-00
Q630	151-0341-00			TRANSISTOR:SILICON,NPN	07263	S040065
Q650	151-0192-00			TRANSISTOR:SILICON,NPN,SEL FROM MPS6521	80009	151-0192-00
Q658	151-0220-00			TRANSISTOR:SILICON,PNP	80009	151-0220-00
Q660	151-0192-00			TRANSISTOR:SILICON,NPN,SEL FROM MPS6521	80009	151-0192-00
Q668	151-0220-00			TRANSISTOR:SILICON,PNP	80009	151-0220-00
Q670	151-0192-00			TRANSISTOR:SILICON,NPN,SEL FROM MPS6521	80009	151-0192-00
Q678	151-0220-00			TRANSISTOR:SILICON,PNP	80009	151-0220-00

Ckt No.	Tektronix Part No.	Serial/Model No. Eff	Dscont	Name & Description	Mfr Code	Mfr Part Number
Q680	151-0192-00			TRANSISTOR:SILICON,NPN,SEL FROM MPS6521	80009	151-0192-00
Q688	151-0220-00			TRANSISTOR:SILICON,PNP	80009	151-0220-00
R620	316-0102-00			RES.,FXD,CMPSN:1K OHM,10%,0.25W	01121	CB1021
R621	316-0222-00			RES.,FXD,CMPSN:2.2K OHM,10%,0.25W	01121	CB2221
R622	315-0223-00	B010100	B029999	RES.,FXD,CMPSN:22K OHM,5%,0.25W	01121	CB2235
R622	315-0163-00	B030000		RES.,FXD,CMPSN:16K OHM,5%,0.25W	01121	CB1635
R626	316-0102-00			RES.,FXD,CMPSN:1K OHM,10%,0.25W	01121	CB1021
R628	315-0223-00	B010100	B029999	RES.,FXD,CMPSN:22K OHM,5%,0.25W	01121	CB2235
R628	315-0183-00	B030000		RES.,FXD,CMPSN:18K OHM,5%,0.25W	01121	CB1835
R630	316-0474-00			RES.,FXD,CMPSN:470K OHM,10%,0.25W	01121	CB4741
R631	316-0332-00			RES.,FXD,CMPSN:3.3K OHM,10%,0.25W	01121	CB3321
R632	315-0273-00			RES.,FXD,CMPSN:27K OHM,5%,0.25W	01121	CB2735
R634	316-0103-00			RES.,FXD,CMPSN:10K OHM,10%,0.25W	01121	CB1031
R635	316-0102-00			RES.,FXD,CMPSN:1K OHM,10%,0.25W	01121	CB1021
R636	316-0103-00			RES.,FXD,CMPSN:10K OHM,10%,0.25W	01121	CB1031
R637	316-0102-00			RES.,FXD,CMPSN:1K OHM,10%,0.25W	01121	CB1021
R640	316-0562-00			RES.,FXD,CMPSN:5.6K OHM,10%,0.25W	01121	CB5621
R641	316-0561-00			RES.,FXD,CMPSN:560 OHM,10%,0.25W	01121	CB5611
R642	316-0103-00			RES.,FXD,CMPSN:10K OHM,10%,0.25W	01121	CB1031
R643	316-0102-00			RES.,FXD,CMPSN:1K OHM,10%,0.25W	01121	CB1021
R650	315-0393-00			RES.,FXD,CMPSN:39K OHM,5%,0.25W	01121	CB3935
R651	316-0103-00			RES.,FXD,CMPSN:10K OHM,10%,0.25W	01121	CB1031
R652	315-0273-00			RES.,FXD,CMPSN:27K OHM,5%,0.25W	01121	CB2735
R656	321-0222-00			RES.,FXD,FILM:2K OHM,1%,0.125W	91637	MFF1816G20000F
R657	315-0822-00			RES.,FXD,CMPSN:8.2K OHM,5%,0.25W	01121	CB8225
R659	316-0101-00			RES.,FXD,CMPSN:100 OHM,10%,0.25W	01121	CB1011
R660	315-0393-00			RES.,FXD,CMPSN:39K OHM,5%,0.25W	01121	CB3935
R662	315-0273-00			RES.,FXD,CMPSN:27K OHM,5%,0.25W	01121	CB2735
R665	321-0159-00			RES.,FXD,FILM:442 OHM,1%,0.125W	91637	MFF1816G442R0F
R666	321-0222-00			RES.,FXD,FILM:2K OHM,1%,0.125W	91637	MFF1816G20000F
R667	315-0822-00			RES.,FXD,CMPSN:8.2K OHM,5%,0.25W	01121	CB8225
R669	316-0101-00			RES.,FXD,CMPSN:100 OHM,10%,0.25W	01121	CB1011
R670	315-0393-00			RES.,FXD,CMPSN:39K OHM,5%,0.25W	01121	CB3935
R671	316-0331-00			RES.,FXD,CMPSN:330 OHM,10%,0.25W	01121	CB3311
R672	315-0223-00			RES.,FXD,CMPSN:22K OHM,5%,0.25W	01121	CB2235
R675	311-1133-00			RES.,VAR,NONWIR:10K OHM,30%,0.25W	71450	201-YA5534
R676	321-0222-00			RES.,FXD,FILM:2K OHM,1%,0.125W	91637	MFF1816G20000F
R677	315-0822-00			RES.,FXD,CMPSN:8.2K OHM,5%,0.25W	01121	CB8225
R679	316-0101-00			RES.,FXD,CMPSN:100 OHM,10%,0.25W	01121	CB1011
R680	315-0393-00			RES.,FXD,CMPSN:39K OHM,5%,0.25W	01121	CB3935
R681	316-0331-00			RES.,FXD,CMPSN:330 OHM,10%,0.25W	01121	CB3311
R682	315-0223-00			RES.,FXD,CMPSN:22K OHM,5%,0.25W	01121	CB2235
R685	321-0159-00			RES.,FXD,FILM:442 OHM,1%,0.125W	91637	MFF1816G442R0F
R686	321-0222-00			RES.,FXD,FILM:2K OHM,1%,0.125W	91637	MFF1816G20000F
R687	315-0822-00			RES.,FXD,CMPSN:8.2K OHM,5%,0.25W	01121	CB8225
U640	156-0057-00			MICROCIRCUIT,DI:QUAD 2-INPUT NAND GATE	07263	7401PC
				A2 POWER SUPPLY CIRCUIT CARD ASSEMBLY		
	670-1339-00			COMPLETE CARD:	80009	670-1339-00

Ckt No.	Tektronix Part No.	Serial/Model No. Eff	Dscont	Name & Description	Mfr Code	Mfr Part Number
C810	290-0511-00			CAP.,FXD,ELCTLT:250UF,+75-10%,250V	56289	68D10464
C815	290-0510-00			CAP.,FXD,ELCTLT:6000UF,+100-10%,15V	56289	66D10327
C820	290-0134-00			CAP.,FXD,ELCTLT:22UF,20%,15V	56289	150D226X0015B2
C822	281-0512-00			CAP.,FXD,CER DI:27PF,+/-2.7PF,500V	72982	308-000C0G0270K
C830	285-0629-00			CAP.,FXD,PLSTC:0.047UF,20%,100V	56289	410P47301
C837	290-0509-00			CAP.,FXD,ELCTLT:3000UF,+100-10%,50V	56289	68D10454
C839	290-0509-00			CAP.,FXD,ELCTLT:3000UF,+100-10%,50V	56289	68D10454
C842	290-0175-00			CAP.,FXD,ELCTLT:10UF,20%,35V	56289	150D106X0035R2
C852	281-0550-00			CAP.,FXD,CER DI:120PF,10%,500V	04222	7001-1373
C857	283-0003-00			CAP.,FXD,CER DI:0.01UF,+80-20%,150V	72982	855558Z5U0103Z
C860	290-0175-00			CAP.,FXD,ELCTLT:10UF,20%,35V	56289	150D106X0035R2
C865	281-0550-00	B010100	B039999	CAP.,FXD,CER DI:120PF,10%,500V	04222	7001-1373
C865	281-0543-00	B040000		CAP.,FXD,CER DI:270PF,10%,500V	72982	301055X5P271K
C870	290-0134-00			CAP.,FXD,ELCTLT:22UF,20%,15V	56289	150D226X0015B2
C872	281-0572-00			CAP.,FXD,CER DI:6.8PF,+/-0.5PF,500V	72982	301-000C0H0689D
C875	283-0003-00			CAP.,FXD,CER DI:0.01UF,+80-20%,150V	72982	855558Z5U0103Z
C881	290-0267-00			CAP.,FXD,ELCTLT:1UF,20%,35V	56289	162D105X0035CD2
C883	290-0267-00			CAP.,FXD,ELCTLT:1UF,20%,35V	56289	162D105X0035CD2
C890	281-0549-00			CAP.,FXD,CER DI:68PF,10%,500V	72982	301-000U2J0680K
CR810	152-0107-00			SEMICOND DEVICE:SILICON,375V,400MA	80009	152-0107-00
CR811	152-0107-00			SEMICOND DEVICE:SILICON,375V,400MA	80009	152-0107-00
CR812	152-0107-00			SEMICOND DEVICE:SILICON,375V,400MA	80009	152-0107-00
CR813	152-0107-00			SEMICOND DEVICE:SILICON,375V,400MA	80009	152-0107-00
CR815	152-0488-00			SEMICOND DEVICE:SILICON,200V,1500MA	80009	152-0488-00
CR820	152-0066-00			SEMICOND DEVICE:SILICON,400V,750MA	80009	152-0066-00
CR824	152-0141-02			SEMICOND DEVICE:SILICON,30V,150MA	07910	1N4152
CR835	152-0107-00			SEMICOND DEVICE:SILICON,375V,400MA	80009	152-0107-00
CR836	152-0107-00			SEMICOND DEVICE:SILICON,375V,400MA	80009	152-0107-00
CR837	152-0488-00			SEMICOND DEVICE:SILICON,200V,1500MA	80009	152-0488-00
CR841	152-0066-00			SEMICOND DEVICE:SILICON,400V,750MA	80009	152-0066-00
CR842	152-0066-00			SEMICOND DEVICE:SILICON,400V,750MA	80009	152-0066-00
CR850	152-0185-00	B010100	B049999	SEMICOND DEVICE:SILICON,40PIV,150MA	07910	1N4152
CR850	152-0141-02	B050000		SEMICOND DEVICE:SILICON,30V,150MA	07910	1N4152
CR851	152-0185-00	B010100	B049999	SEMICOND DEVICE:SILICON,40PIV,150MA	07910	1N4152
CR851	152-0141-02	B050000		SEMICOND DEVICE:SILICON,30V,150MA	07910	1N4152
CR860	152-0066-00			SEMICOND DEVICE:SILICON,400V,750MA	80009	152-0066-00
CR865	152-0141-02			SEMICOND DEVICE:SILICON,30V,150MA	07910	1N4152
CR870	152-0185-00	B010100	B049999	SEMICOND DEVICE:SILICON,40PIV,150MA	07910	1N4152
CR870	152-0141-02	B050000		SEMICOND DEVICE:SILICON,30V,150MA	07910	1N4152
CR875	152-0185-00	B010100	B049999	SEMICOND DEVICE:SILICON,40PIV,150MA	07910	1N4152
CR875	152-0141-02	B050000		SEMICOND DEVICE:SILICON,30V,150MA	07910	1N4152
CR885	152-0185-00	B010100	B049999	SEMICOND DEVICE:SILICON,40PIV,150MA	07910	1N4152
CR885	152-0141-02	B050000		SEMICOND DEVICE:SILICON,30V,150MA	07910	1N4152
VR850	152-0357-00			SEMICOND DEVICE:ZENER,0.4W,82V,5%	04713	1N983B
VR865	152-0243-00			SEMICOND DEVICE:ZENER,0.4W,15V,5%	81483	1N965B
VR870	152-0227-00			SEMICOND DEVICE:ZENER,0.4W,6.2V,5%	81483	69-6585
F201	159-0019-00			FUSE,CARTRIDGE:3AG,1A,250V,SLOW BLOW	71400	MDL1
F810	159-0028-00			FUSE,CARTRIDGE:3AG,0.25A,250V,FAST-BLOW	71400	AGC 1/4
F835	159-0025-00			FUSE,CARTRIDGE:3AG,0.5A,250V,FAST-BLOW	71400	AGC 1/2
Q820	151-0341-00			TRANSISTOR:SILICON,NPN	07263	S040065
Q825	151-0341-00			TRANSISTOR:SILICON,NPN	07263	S040065
Q845	151-0341-00			TRANSISTOR:SILICON,NPN	07263	S040065

Ckt No.	Tektronix Part No.	Serial/Model No. Eff	Dscont	Name & Description	Mfr Code	Mfr Part Number
Q850	151-0190-00			TRANSISTOR:SILICON,NPN	80009	151-0190-00
Q865	151-0341-00			TRANSISTOR:SILICON,NPN	07263	S040065
Q870	151-0220-00			TRANSISTOR:SILICON,PNP	80009	151-0220-00
Q875	151-0301-00			TRANSISTOR:SILICON,PNP	04713	2N2907A
Q885	151-0341-00			TRANSISTOR:SILICON,NPN	07263	S040065
Q890	151-0341-00			TRANSISTOR:SILICON,NPN	07263	S040065
R810	302-0150-00			RES.,FXD,CMPSN:15 OHM,10%,0.50W	01121	EB1501
R812	304-0683-00			RES.,FXD,CMPSN:68K OHM,10%,1W	01121	GB6831
R815	308-0685-00			RES.,FXD,WW:1.5 OHM,10%,1W	75042	BW20-1R500J
R816	321-0215-00			RES.,FXD,FILM:1.69K OHM,1%,0.125W	91637	MFF1816G16900F
R818	321-0289-00			RES.,FXD,FILM:10K OHM,1%,0.125W	91637	MFF1816G10001F
R820	315-0473-00			RES.,FXD,CMPSN:47K OHM,5%,0.25W	01121	CB4735
R822	316-0681-00			RES.,FXD,CMPSN:680 OHM,10%,0.25W	01121	CB6811
R824	316-0822-00			RES.,FXD,CMPSN:8.2K OHM,10%,0.25W	01121	CB8221
R826	315-0101-00			RES.,FXD,CMPSN:100 OHM,5%,0.25W	01121	CB1015
R827	315-0242-00			RES.,FXD,CMPSN:2.4K OHM,5%,0.25W	01121	CB2425
R830	315-0104-00			RES.,FXD,CMPSN:100K OHM,5%,0.25W	01121	CB1045
R832	315-0473-00			RES.,FXD,CMPSN:47K OHM,5%,0.25W	01121	CB4735
R834	315-0183-00			RES.,FXD,CMPSN:18K OHM,5%,0.25W	01121	CB1835
R841	307-0300-00			RES.,FXD,FILM:150 OHM,5%,10W	76055	7M0LNF150B
R842	308-0686-00			RES.,FXD,WW:2.2 OHM,5%,2W	75042	BWH-2R200J
R846	316-0391-00			RES.,FXD,CMPSN:390 OHM,10%,0.25W	01121	CB3911
R847	315-0183-00			RES.,FXD,CMPSN:18K OHM,5%,0.25W	01121	CB1835
R850	316-0823-00			RES.,FXD,CMPSN:82K OHM,10%,0.25W	01121	CB8231
R851	302-0333-00			RES.,FXD,CMPSN:33K OHM,10%,0.50W	01121	EB3331
R852	316-0681-00			RES.,FXD,CMPSN:680 OHM,10%,0.25W	01121	CB6811
R853	315-0103-00			RES.,FXD,CMPSN:10K OHM,5%,0.25W	01121	CB1035
R857	321-0268-00			RES.,FXD,FILM:6.04K OHM,1%,0.125W	91637	MFF1816G60400F
R858	311-1120-00			RES.,VAR,NONWIR:100 OHM,30%,0.25W	71450	201-YA5531
R859	321-0268-00			RES.,FXD,FILM:6.04K OHM,1%,0.125W	91637	MFF1816G60400F
R860	308-0686-00			RES.,FXD,WW:2.2 OHM,5%,2W	75042	BWH-2R200J
R861	307-0301-00			RES.,FXD,FILM:120 OHM,5%,10W	76055	7M0LNF150B
R863	316-0273-00			RES.,FXD,CMPSN:27K OHM,10%,0.25W	01121	CB2731
R865	315-0131-00	B010100	B039999	RES.,FXD,CMPSN:130 OHM,5%,0.25W	01121	CB1315
R865	315-0301-00	B040000		RES.,FXD,CMPSN:300 OHM,5%,0.25W	01121	CB3015
R867	315-0621-00			RES.,FXD,CMPSN:620 OHM,5%,0.25W	01121	CB6215
R868	315-0101-00			RES.,FXD,CMPSN:100 OHM,5%,0.25W	01121	CB1015
R869	315-0392-00			RES.,FXD,CMPSN:3.9K OHM,5%,0.25W	01121	CB3925
R870	315-0562-00			RES.,FXD,CMPSN:5.6K OHM,5%,0.25W	01121	CB5625
R872	316-0221-00			RES.,FXD,CMPSN:220 OHM,10%,0.25W	01121	CB2211
R873	316-0102-00			RES.,FXD,CMPSN:1K OHM,10%,0.25W	01121	CB1021
R875	315-0101-00			RES.,FXD,CMPSN:100 OHM,5%,0.25W	01121	CB1015
R877	321-0256-00			RES.,FXD,FILM:4.53K OHM,1%,0.125W	91637	MFF1816G45300F
R878	311-1124-00			RES.,FXD,NONWIR:250 OHM,30%,0.25W	71450	201-YA5533
R879	321-0202-00			RES.,FXD,FILM:1.24K OHM,1%,0.125W	91637	MFF1816G12400F
R880	316-0272-00			RES.,FXD,CMPSN:2.7K OHM,10%,0.25W	01121	CB2721
R881	315-0562-00			RES.,FXD,CMPSN:5.6K OHM,5%,0.25W	01121	CB5625
R883	316-0102-00			RES.,FXD,CMPSN:1K OHM,10%,0.25W	01121	CB1021
R885	316-0153-00			RES.,FXD,CMPSN:15K OHM,10%,0.25W	01121	CB1531
R890	322-0686-03			RES.,FXD,FILM:7.23K OHM,0.25W,0.25W	91637	MFF1421D72300C
R891	321-0097-03			RES.,FXD,FILM:100 OHM,0.25%,0.125W	91637	MFF1816D100R0C

SECTION 8

DIAGRAMS AND CIRCUIT BOARD ILLUSTRATIONS

Symbols and Reference Designators

Electrical components shown on the diagrams are in the following units unless noted otherwise:

Capacitors = Values one or greater are in picofarads (pF).
Values less than one are in microfarads (μF).
Resistors = Ohms (Ω)

Symbols used on the diagrams are based on USA Standard Y32.2-1967.

Logic symbology is based on MIL-STD-806B in terms of positive logic. Logic symbols depict the logic function performed and may differ from the manufacturer's data.

The following special symbols are used on the diagrams:

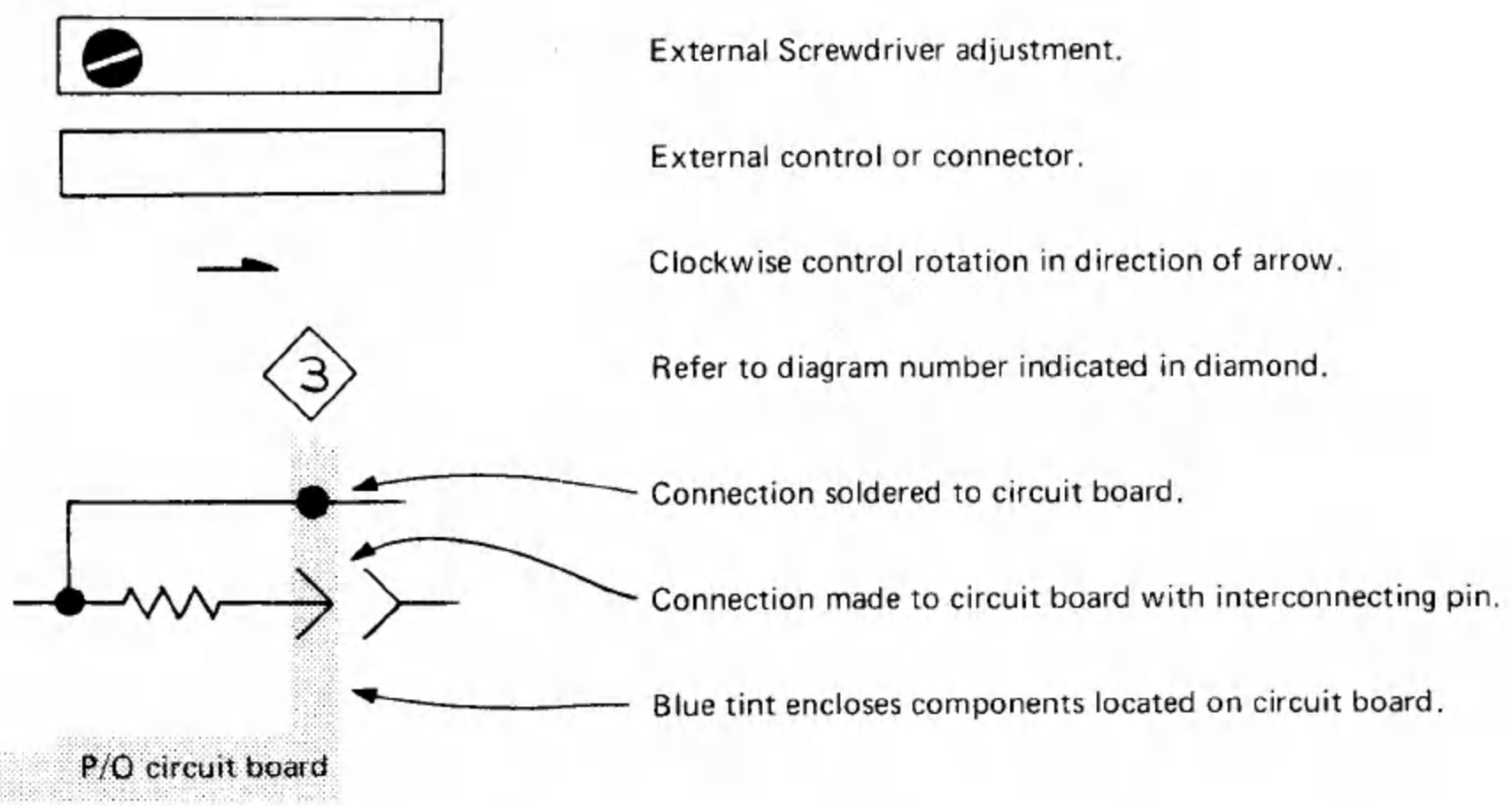

The following prefix letters are used as reference designators to identify components or assemblies on the diagrams.

A Assembly, separable or repairable (circuit board, etc.)
AT Attenuator, fixed or variable
B Motor
BT Battery
C Capacitor, fixed or variable
CR Diode, signal or rectifier
DL Delay line
DS Indicating device (lamp)
F Fuse
FL Filter
H Heat dissipating device (heat sink, heat radiator, etc.)
HR Heater
J Connector, stationary portion
K Relay
L Inductor, fixed or variable
LR Inductor/resistor combination
M Meter
Q Transistor or silicon-controlled rectifier
P Connector, movable portion
R Resistor, fixed or variable
RT Thermistor
S Switch
T Transformer
TP Test point
U Assembly, inseparable or non-repairable (integrated circuit, etc.)
V Electron tube
VR Voltage regulator (zener diode, etc.)
Y Crystal

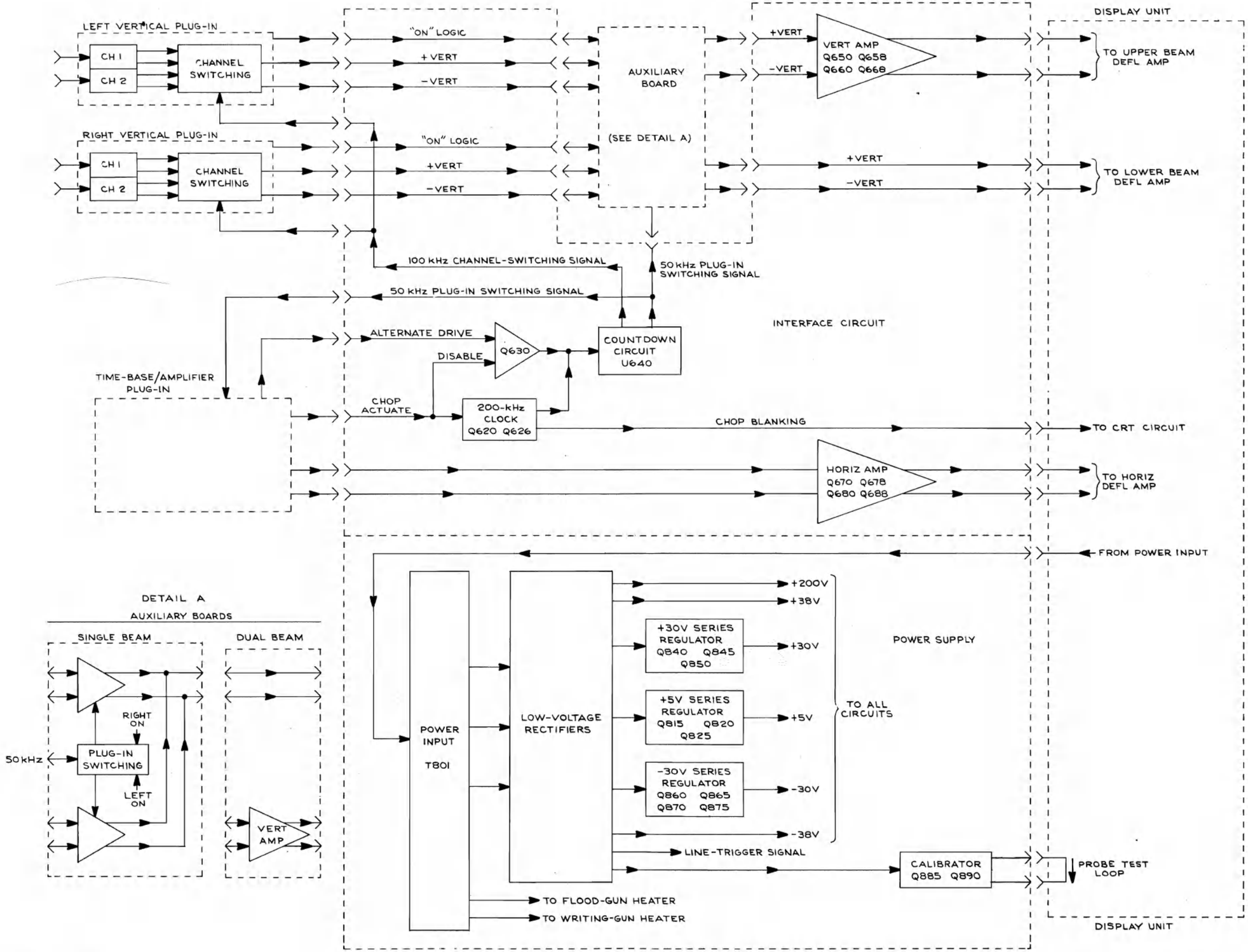

5103N

A1

BLOCK DIAGRAM

INTERFACE BOARD PARTS LOCATION GRID

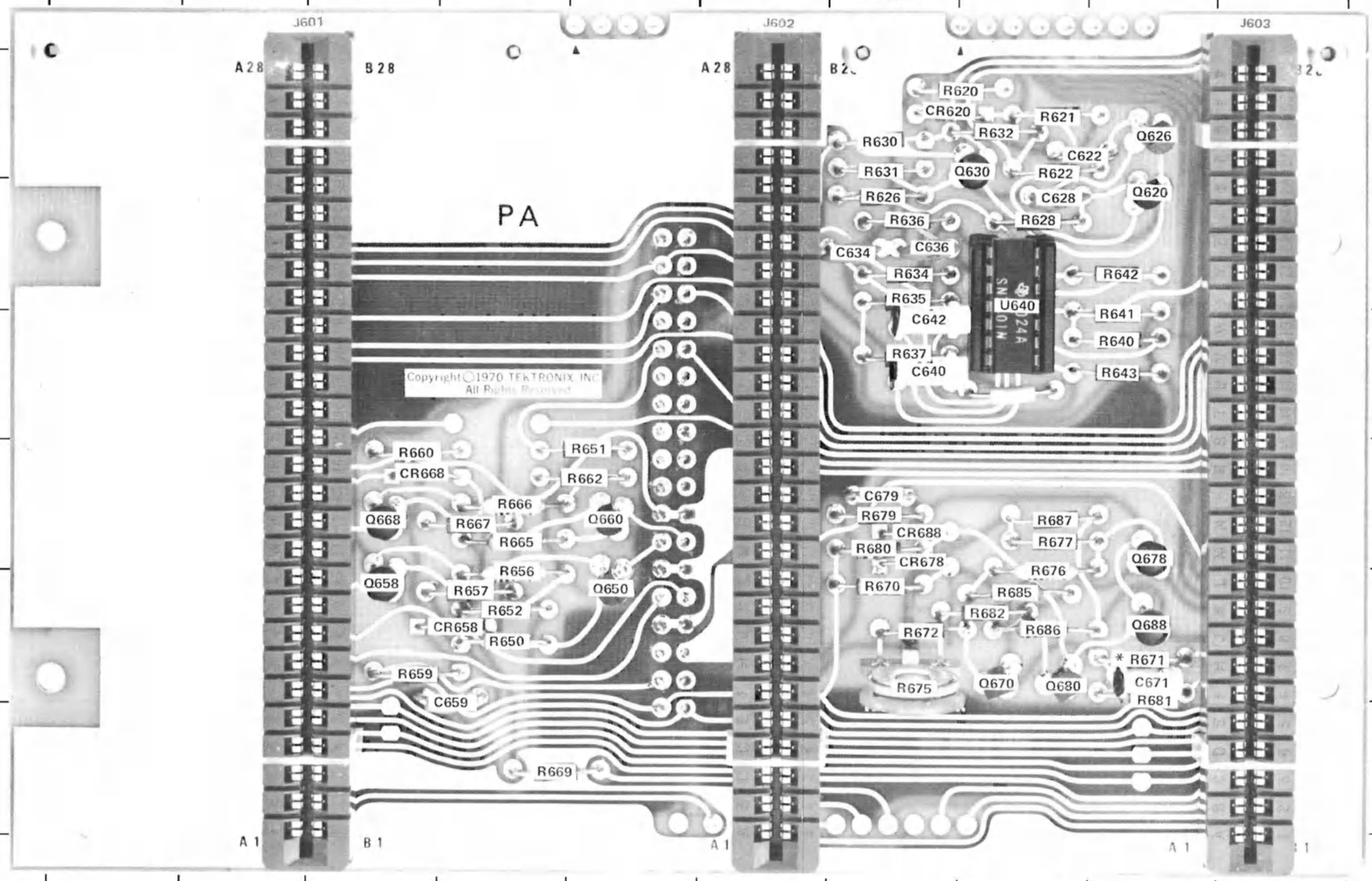

CKT NO	GRID LOC
C622	J-2
C628	I-3
C634	H-3
C636	H-3
C640	H-4
C642	H-4
C659	E-7
C671	J-6
C679	H-5
CR620	H-2
CR658	E-6
CR668	D-5
CR678	H-5
CR688	H-5
Q620	J-3
Q626	J-2
Q630	I-2
Q650	F-6
Q658	D-6
Q660	F-5
Q668	D-5
Q670	I-6
Q678	J-5
Q680	I-6
Q688	J-6
R620	I-2
R621	I-2
R622	I-2
R626	H-3
R628	I-3
R630	H-2
R631	H-2
R632	I-2
R634	H-3
R635	H-3
R636	H-3
R637	H-4
R639	I-4
R640	J-4
R641	J-4
R642	J-3
R643	J-4
R650	E-6
R651	F-5
R652	E-6
R656	E-6
R657	E-6
R659	D-6
R660	D-5
R662	F-5
R665	E-5
R666	E-5
R667	E-5
R669	E-7
R670	H-6
R671	J-6
R672	H-6
R675	H-6
R676	I-6
R677	I-5
R679	H-5
R680	H-5
R681	J-7
R682	I-6
R685	I-6
R686	I-6
R687	I-5
U640	I-3

* PINS 14A AND 14B ARE FOR SIGNAL GROUNDS ONLY (LOW NOISE GROUND.) THE PINS ARE GROUNDED VIA THE INTERFACE AND LV POWER SUPPLY CIRCUIT BOARD GROUND LANES WHICH ARE CONNECTED TO CHASSIS GROUND.
PIN 2A PROVIDES A RETURN FOR ALL GROUNDS EXCEPT SIGNAL GROUNDS. THE PIN IS DIRECTLY GROUNDED TO THE CHASSIS OF THE 5103N.

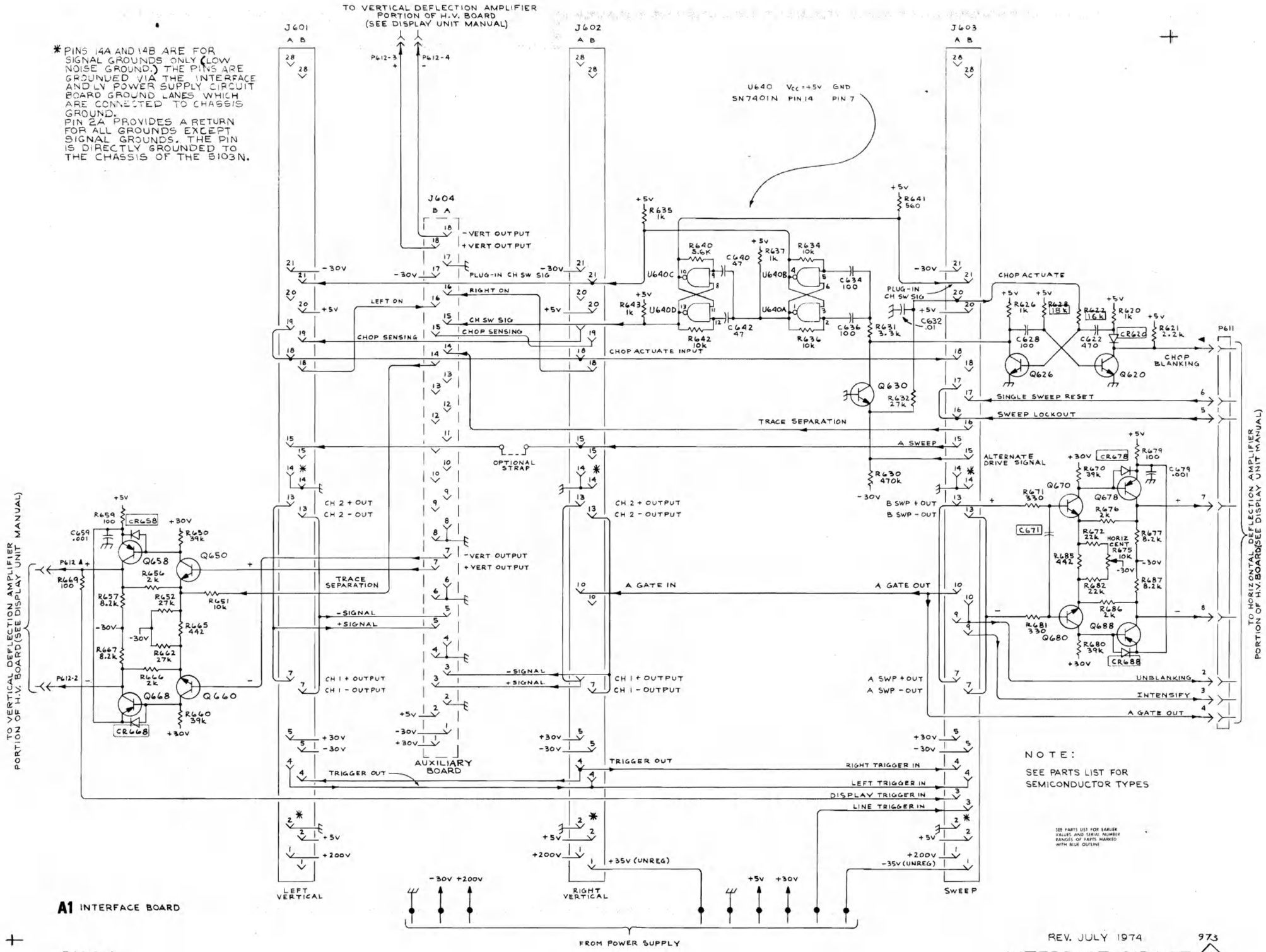

NOTE:

SEE PARTS LIST FOR SEMICONDUCTOR TYPES

SEE PARTS LIST FOR EARLIER VALUES AND SERIAL NUMBER RANGES OF PARTS MARKED WITH BLUE OUTLINE

A1 INTERFACE BOARD

5103N

REV. JULY 1974

INTERFACE CIRCUIT 1

973

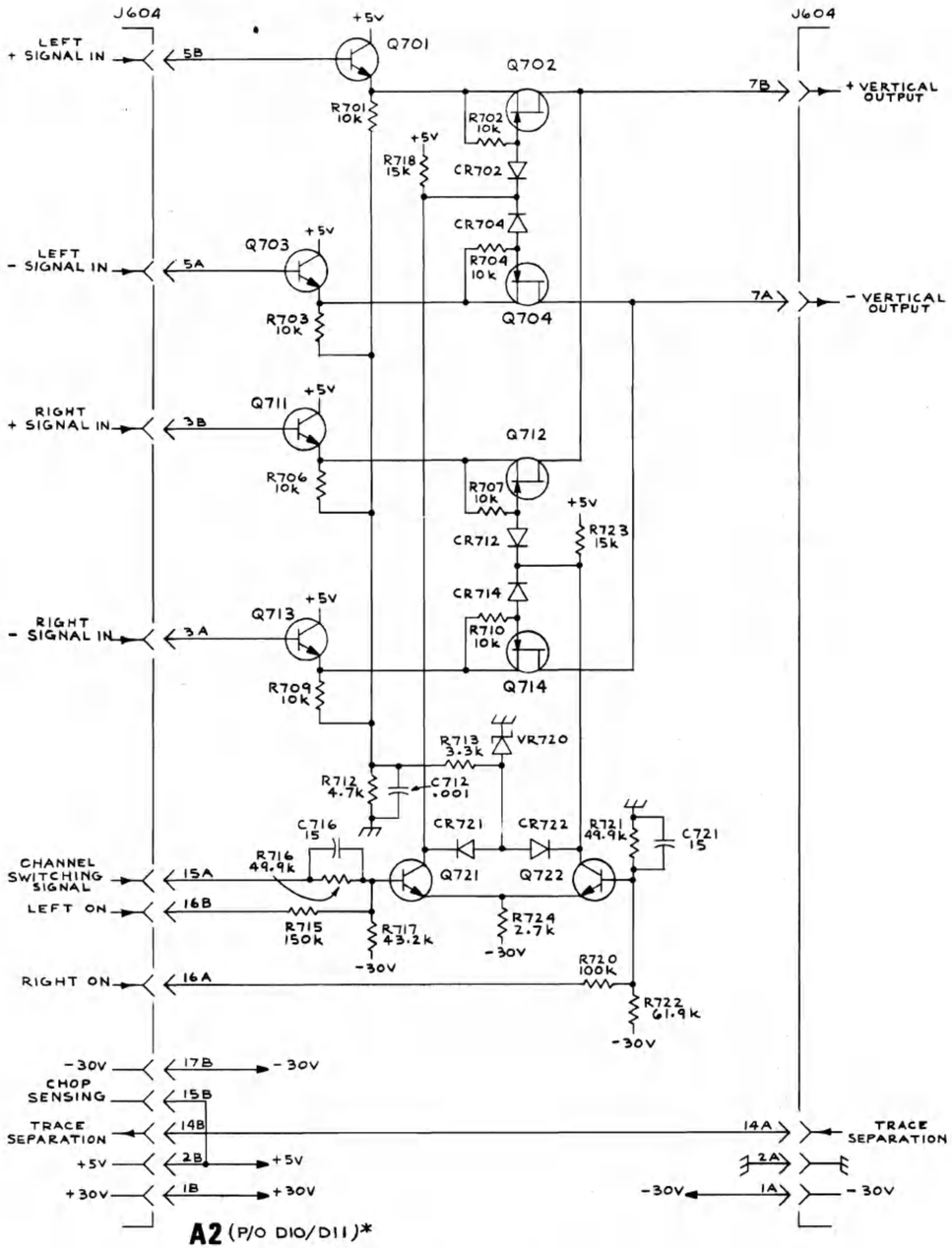

A2 (P/O D10/D11)*

SINGLE BEAM

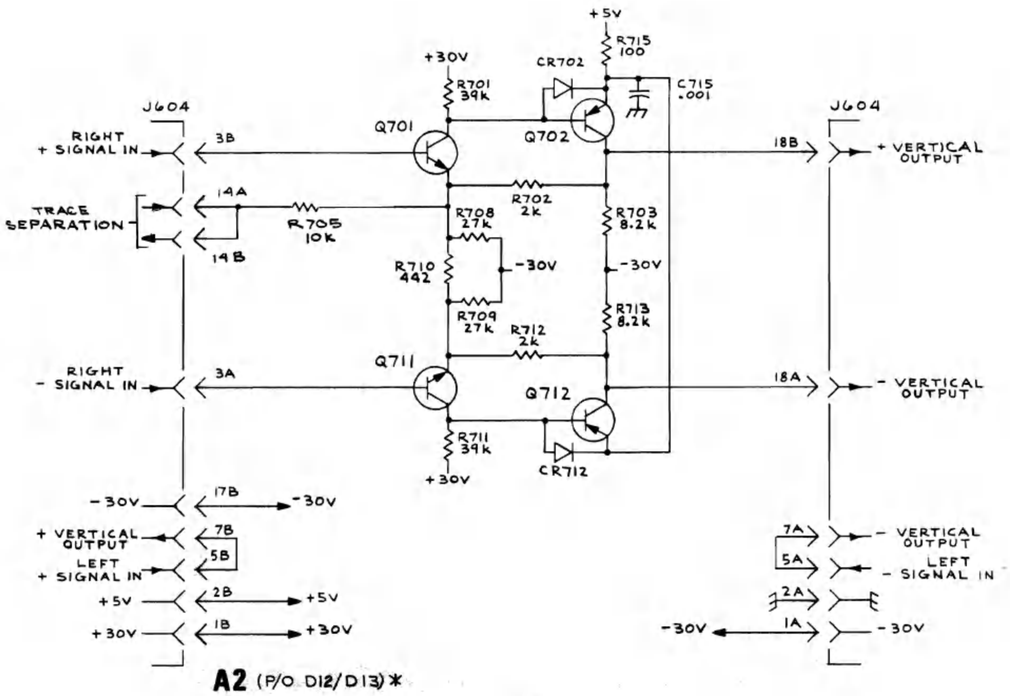

A2 (P/O D12/D13)*

DUAL BEAM

NOTE:

*DIAGRAMS ARE PRESENTED HERE FOR CONVENIENCE. PARTS LIST, BOARD PHOTOS, AND COMPONENT LOCATION GRIDS LOCATED IN THE DISPLAY UNIT MANUALS.

POWER SUPPLY BOARD PARTS LOCATION GRID

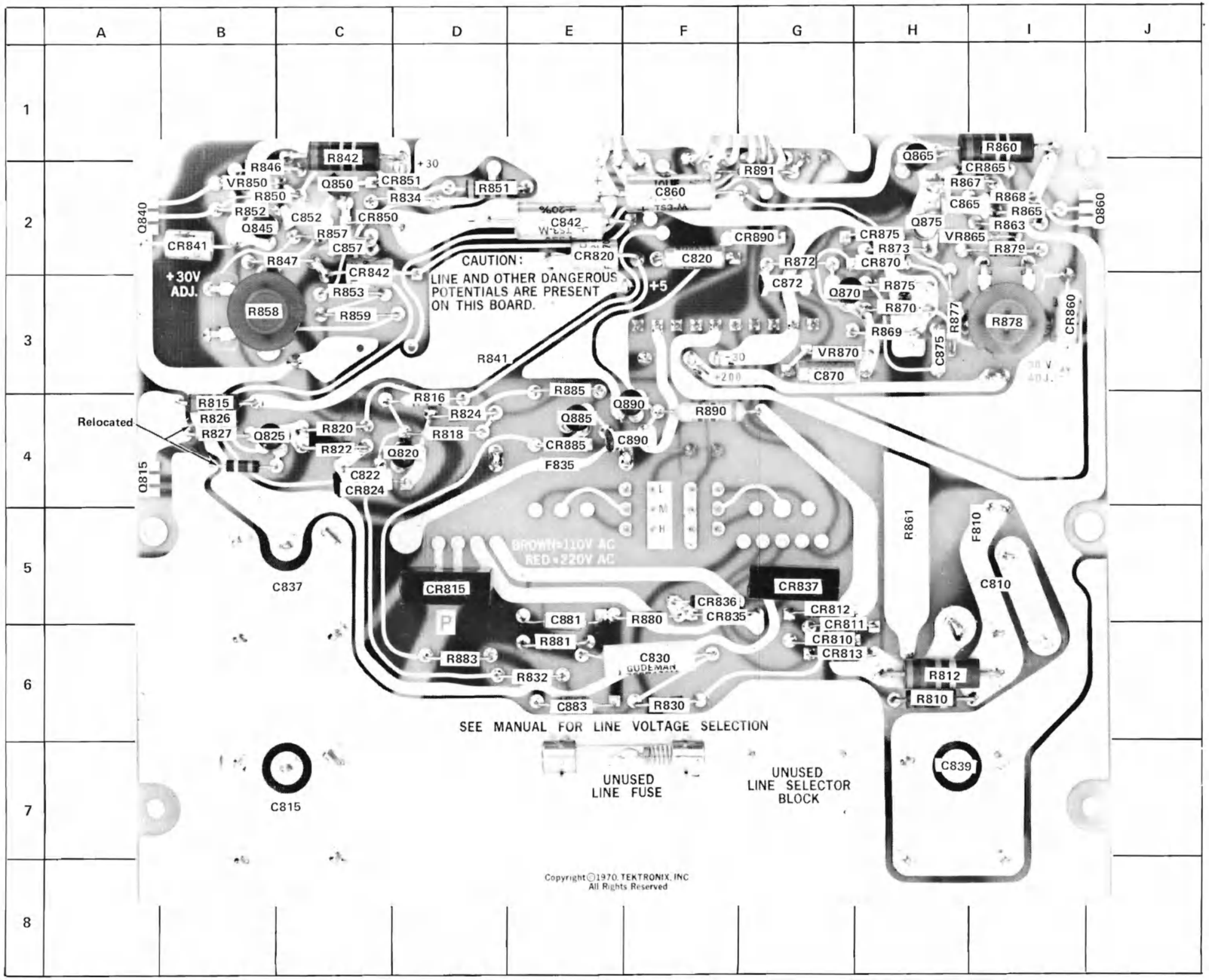

CKT NO	GRID LOC
C810	I-5
C815	C-5
C820	F-2
C822	C-4
C830	F-6
C837	C-7
C839	H-7
C842	E-2
C852	C-2
C857	C-2
C860	F-2
C865	H-2
C870	G-3
C872	G-3
C875	H-3
C881	E-5
C883	E-6
C890	F-4
CR810	G-6
CR811	G-6
CR812	G-5
CR813	G-6
CR815	G-5
CR820	E-2
CR824	C-4
CR835	F-5
CR836	F-5
CR837	D-5
CR841	B-2
CR842	C-2
CR850	C-2
CR851	D-2
CR860	I-3
CR865	I-2
CR870	H-2
CR875	H-2
CR885	E-4
CR890	G-2
VR850	B-2
VR865	I-2
VR870	G-3
F810	I-5
F835	E-4
Q815	A-4
Q820	D-4
Q825	B-4
Q840	A-2
Q845	B-2
Q850	C-2
Q860	J-2
Q865	H-1
Q870	G-3
Q875	H-2
Q885	E-4
Q890	F-4
R810	H-6
R812	H-6
R815	B-4
R816	D-4
R818	D-4
R820	C-4
R822	C-4
R824	D-4
R826	B-4
R827	B-4
R830	F-6
R832	E-6
R834	D-2
R841	D-3
R842	C-1
R846	B-2
R847	C-2
R850	B-2
R851	D-2
R852	B-2
R853	C-3
R857	C-2
R858	B-3
R859	C-3
R860	I-1
R861	H-5
R863	I-2
R865	I-2
R867	H-2
R868	I-2
R869	H-3
R870	H-3
R872	G-2
R873	H-2
R875	H-3
R877	H-3
R878	I-3
R879	I-2
R880	F-5
R881	E-6
R883	D-6
R885	E-3
R890	F-4
R891	G-2

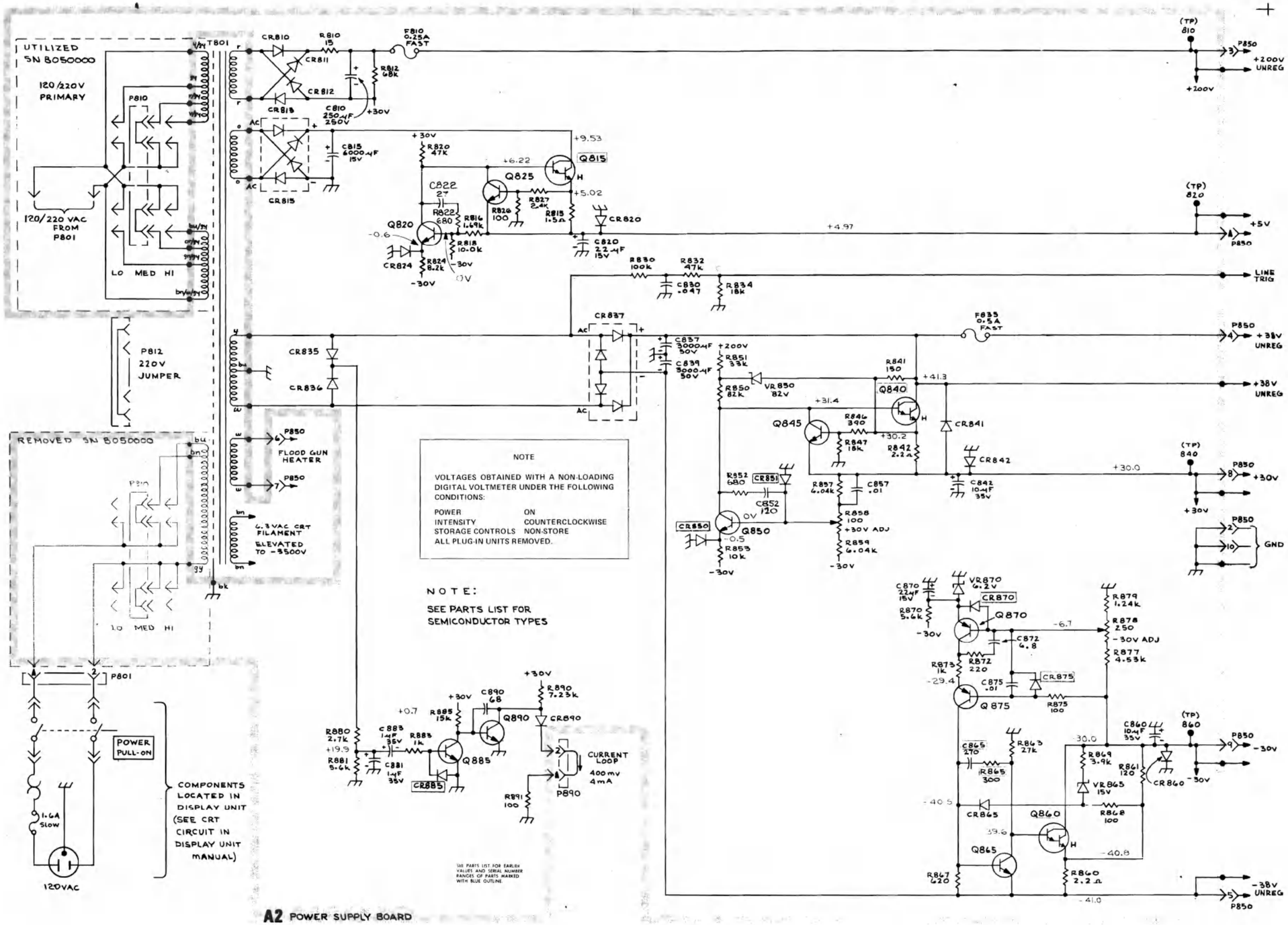

A2 POWER SUPPLY BOARD

REPLACEABLE MECHANICAL PARTS

PARTS ORDERING INFORMATION

Replacement parts are available from or through your local Tektronix, Inc. Field Office or representative.

Changes to Tektronix instruments are sometimes made to accommodate improved components as they become available, and to give you the benefit of the latest circuit improvements developed in our engineering department. It is therefore important, when ordering parts, to include the following information in your order: Part number, instrument type or number, serial number, and modification number if applicable.

If a part you have ordered has been replaced with a new or improved part, your local Tektronix, Inc. Field Office or representative will contact you concerning any change in part number.

Change information, if any, is located at the rear of this manual.

SPECIAL NOTES AND SYMBOLS

X000	Part first added at this serial number
00X	Part removed after this serial number

FIGURE AND INDEX NUMBERS

Items in this section are referenced by figure and index numbers to the illustrations.

INDENTATION SYSTEM

This mechanical parts list is indented to indicate item relationships. Following is an example of the indentation system used in the description column.

1 2 3 4 5 Name & Description

Assembly and/or Component
Attaching parts for Assembly and/or Component
- - - * - - -
Detail Part of Assembly and/or Component
Attaching parts for Detail Part
- - - * - - -
Parts of Detail Part
Attaching parts for Parts of Detail Part
- - - * - - -

Attaching Parts always appear in the same indentation as the item it mounts, while the detail parts are indented to the right. Indented items are part of, and included with, the next higher indentation. The separation symbol - - - * - - - indicates the end of attaching parts.

Attaching parts must be purchased separately, unless otherwise specified.

ITEM NAME

In the Parts List, an Item Name is separated from the description by a colon (:). Because of space limitations, an Item Name may sometimes appear as incomplete. For further Item Name identification, the U.S. Federal Cataloging Handbook H6-1 can be utilized where possible.

ABBREVIATIONS

"	INCH	ELCTRN	ELECTRON	IN	INCH	SE	SINGLE END
#	NUMBER SIZE	ELEC	ELECTRICAL	INCAND	INCANDESCENT	SECT	SECTION
ACTR	ACTUATOR	ELCTLT	ELECTROLYTIC	INSUL	INSULATOR	SEMICOND	SEMICONDUCTOR
ADPTR	ADAPTER	ELEM	ELEMENT	INTL	INTERNAL	SHLD	SHIELD
ALIGN	ALIGNMENT	EPL	ELECTRICAL PARTS LIST	LPHLDR	LAMPHOLDER	SHLDR	SHOULDERED
AL	ALUMINUM	EQPT	EQUIPMENT	MACH	MACHINE	SKT	SOCKET
ASSEM	ASSEMBLED	EXT	EXTERNAL	MECH	MECHANICAL	SL	SLIDE
ASSY	ASSEMBLY	FIL	FILLISTER HEAD	MTG	MOUNTING	SLFLKG	SELF-LOCKING
ATTEN	ATTENUATOR	FLEX	FLEXIBLE	NIP	NIPPLE	SLVG	SLEEVING
AWG	AMERICAN WIRE GAGE	FLH	FLAT HEAD	NON WIRE	NOT WIRE WOUND	SPR	SPRING
BD	BOARD	FLTR	FILTER	OBD	ORDER BY DESCRIPTION	SQ	SQUARE
BRKT	BRACKET	FR	FRAME or FRONT	OD	OUTSIDE DIAMETER	SST	STAINLESS STEEL
BRS	BRASS	FSTNR	FASTENER	OVH	OVAL HEAD	STL	STEEL
BRZ	BRONZE	FT	FOOT	PH BRZ	PHOSPHOR BRONZE	SW	SWITCH
BSHG	BUSHING	FXD	FIXED	PL	PLAIN or PLATE	T	TUBE
CAB	CABINET	GSKT	GASKET	PLSTC	PLASTIC	TERM	TERMINAL
CAP	CAPACITOR	HDL	HANDLE	PN	PART NUMBER	THD	THREAD
CER	CERAMIC	HEX	HEXAGON	PNH	PAN HEAD	THK	THICK
CHAS	CHASSIS	HEX HD	HEXAGONAL HEAD	PWR	POWER	TNSN	TENSION
CKT	CIRCUIT	HEX SOC	HEXAGONAL SOCKET	RCPT	RECEPTACLE	TPG	TAPPING
COMP	COMPOSITION	HLCPS	HELICAL COMPRESSION	RES	RESISTOR	TRH	TRUSS HEAD
CONN	CONNECTOR	HLEXT	HELICAL EXTENSION	RGD	RIGID	V	VOLTAGE
COV	COVER	HV	HIGH VOLTAGE	RLF	RELIEF	VAR	VARIABLE
CPLG	COUPLING	IC	INTEGRATED CIRCUIT	RTNR	RETAINER	W/	WITH
CRT	CATHODE RAY TUBE	ID	INSIDE DIAMETER	SCH	SOCKET HEAD	WSHR	WASHER
DEG	DEGREE	IDENT	IDENTIFICATION	SCOPE	OSCILLOSCOPE	XFMR	TRANSFORMER
DWR	DRAWER	IMPLR	IMPELLER	SCR	SCREW	XSTR	TRANSISTOR

CROSS INDEX—MFR. CODE NUMBER TO MANUFACTURER

Mfr. Code	Manufacturer	Address	City, State, Zip
05574	VIKING INDUSTRIES, INC.	21001 NORDHOFF STREET	CHATSWORTH, CA 91311
06666	GENERAL DEVICES CO., INC.	525 S. WEBSTER AVE.	INDIANAPOLIS, IN 46219
06982	MOORE, HOWARD J., CO.	105 E. 16TH ST.	NEW YORK, NY 10003
08261	SPECTRA-STRIP CORP.	7100 LAMPSON AVE.	GARDEN GROVE, CA 92642
22526	BERG ELECTRONICS, INC.	YOUK EXPRESSWAY	NEW CUMBERLAND, PA 17070
45722	USM CORP., PARKER-KALON FASTENER DIV.		CAMPBELLSVILLE, KY 42718
57771	STIMPSON, EDWIN B., CO., INC.	900 SYLVAN AVENUE	BAYPORT, NY 11705
71785	TRW, CINCH CONNECTORS	1501 MORSE AVENUE	ELK GROVE VILLAGE, IL 60007
73743	FISCHER SPECIAL MFG. CO.	446 MORGAN ST.	CINCINNATI, OH 45206
77250	PHEOLL MANUFACTURING CO., DIVISION OF ALLIED PRODUCTS CORP.	5700 W. ROOSEVELT RD.	CHICAGO, IL 60650
78189	ILLINOIS TOOL WORKS, INC. SHAKEPROOF DIVISION	ST. CHARLES ROAD	ELGIN, IL 60120
80009	TEKTRONIX, INC.	P. O. BOX 500	BEAVERTON, OR 97077
83385	CENTRAL SCREW CO.	2530 CRESCENT DR.	BROADVIEW, IL 60153
83501	GAVITT WIRE AND CABLE, DIVISION OF RSC INDUSTRIES, INC.	CENTRAL ST.	BROOKFIELD, MA 01506
95238	CONTINENTAL CONNECTOR CORP.	34-63 56TH ST.	WOODSIDE, NY 11377

Fig. & Index No.	Tektronix Part No.	Serial/Model No. Eff	Dscont	Qty	1 2 3 4 5	Name & Description	Mfr Code	Mfr Part Number
1-1	----- -----			1		CKT CARD ASSY:INTERFACE(SEE A1 EPL)		
-2	131-0608-00			12		. CONTACT,ELEC:0.365 INCH LONG	22526	47357
-3	131-1043-00			1		. CONNECTOR,RCPT:18/36 CONTACT	05574	2VK180/2-2
-4	131-1078-00			3		. CONNECTOR,RCPT,:28/56 CONTACT	95238	K600-11-56Y25
-5	136-0269-00			1		. SOCKET,PLUG-IN:14 CONTACT,LOW CLEARANCE	71785	133-59-02-073
-6	214-1593-02			6		. KEY,CONN PLZN:	80009	214-1593-02
-7	386-1938-00			1		. BRACKET,REINF:	80009	386-1938-00
						(ATTACHING PARTS)		
-8	210-0777-00			4		. RIVET,BLIND:0.125 DIA GRIP,AL	45722	AD42AB5
						- - - * - - -		
						(ATTACHING PARTS FOR CKT CD ASSY)		
-9	213-0146-00			4		SCR,TPG,THD FOR:6-20 X 0.313 INCH,PNH STL	83385	OBD
						- - - * - - -		
-10	----- -----			1		CKT CARD ASSY:POWER SUPPLY(SEE A2 EPL)		
-11	131-0608-00			14		. CONTACT,ELEC:0.365 INCH LONG	22526	47357
	131-0589-00			14		. CONTACT,ELEC:0.46 INCH LONG	22526	47350
-12	200-0293-00			1		. SHLD,CAPACITOR:2.563 INCHES LONG	80009	200-0293-00
-13	200-0294-00	B01010	B043669	2		. SHLD,CAPACITOR:3.562 X 1.0 INCH LONG	80009	200-0294-00
	200-0294-00	B043670		1		. SHLD,CAPACITOR:3.562 X 1.0 INCH LONG	80009	200-0294-00
-14	214-0579-00			4		. TERM.,TEST PT:0.40 INCH LONG	80009	214-0579-00
-15	344-0154-00			6		. CLIP,ELECTRICAL:FOR 0.25 INCH DIA FUSE	80009	344-0154-00
						(ATTACHING PARTS FOR CKT CD ASSY)		
-16	211-0504-00			6		SCREW,MACHINE:6-32 X 0.25 INCH,PNH STL	83385	OBD
						- - - * - - -		
-17	----- -----			1		TRANSFORMER:(SEE T801 EPL)		
-18	352-0198-00			1		. CONN BODY,PL,EL:2 WIRE BLACK	80009	352-0198-00
-19	131-0622-00			2		. CONTACT,ELEC:0.577"L,28-32 AWG WIRE	22526	46241
						(ATTACHING PARTS FOR XFMR)		
-20	212-0516-00	B010100	B049999	4		SCREW,MACHINE:10-32 X 2 INCH,HEX HD STL	77250	OBD
	212-0522-00	B050000		4		SCREW,MACHINE:10-32 X 2.50",HEX HD STL	83385	OBD
	210-0812-00	B062200		4		WASHER,NONMETAL:#10,FIBER	06982	OBD
-21	166-0226-00	B010100	B049999	4		INSUL SLUG,ELEC:1.125 INCHES LONG	80009	166-0226-00
	166-0457-00	B050000		4		INSUL SLVG,ELEC:0.19 ID X 1.875"LONG MYLAR	80009	166-0457-00
-22	220-0410-00			4		NUT,EXTENDED WA:10-32 X 0.375 INCH,STL	83385	OBD
						- - - * - - -		
-23	200-0772-02			1		COVER,ELEC XFMR:	80009	200-0772-02
-24	333-1425-00			1		PANEL,FRONT:	80009	333-1425-00
-25	343-0315-00			2		CLAMP,XSTR:	80009	343-0315-00
						(ATTACHING PARTS FOR EACH)		
-26	210-0407-00			3		NUT,PLAIN,HEX.:6-32 X 0.25 INCH,BRS	73743	3038-0228-402
						- - - * - - -		
-27	342-0082-00			3		INSULATOR,PLATE:0.52 SQ X 0.015 INCH THK,AL	80009	342-0082-00
-28	351-0293-00			3		GUIDE,SLIDE:BLUE	80009	351-0293-00
-29	351-0286-00	B010100	B039999	3		GUIDE,PL-IN UNIT:	80009	351-0286-00
	351-0286-01	B040000	B062225	3		GUIDE,PL-IN UNIT:	80009	351-0286-01
	351-0286-02	B062226	B065347	3		GUIDE,PL-IN UNIT:	80009	351-0286-02
	351-0286-04	B065348		3		GUIDE,SLIDE:BLACK	80009	351-0286-04
						(ATTACHING PARTS FOR EACH)		
-30	211-0105-00			1		SCREW,MACHINE:4-40 X 0.188"100 DEG,FLH STL	83385	OBD
						- - - * - - -		
-31	426-0738-00			1		FR ASSY,SCOPE:	80009	426-0738-00
	210-0617-00	XB030000		3		. EYELET,METALLIC:	57771	G53-4
	131-1254-01	XB030000		3		. CONTACT,ELEC:	80009	131-1254-01
-32	175-0826-00			FT		WIRE,ELECTRICAL:3 WIRE RIBBON	08261	TEK-175-0826-00
-33	175-0829-00			FT		WIRE,ELECTRICAL:6 WIRE RIBBON	83501	TEK-175-0829-00
	131-1199-00			1		LINK,TERM.CONNE:	80009	131-1199-00
-34	131-0707-00			2		. CONTACT,ELEC:0.48"L,22-26 AWG WIRE	22526	47439
-35	352-0166-02			1		. CONN BODY,PL,EL:8 WIRE RED	80009	352-0166-02
	131-1200-00			1		LINK,TERM.CONNE:	80009	131-1200-00
	131-0707-00			2		. CONTACT,ELEC:0.48"L,22-26 AWG WIRE	22526	47439
	352-0166-01			1		. HOLDER,TERM.CON:8 WIRE,BROWN	80009	352-0166-01

Fig. & Index No.	Tektronix Part No.	Serial/Model No. Eff	Dscont	Qty	1 2 3 4 5	Name & Description	Mfr Code	Mfr Part Number
2-1	200-0728-01			1		COV,HANDLE END:	80009	200-0728-01
-2	200-0728-00			1		COV,HANDLE END:	80009	200-0728-00
-3	367-0116-00			1		HANDLE,CARRYING:	80009	367-0116-00
						(ATTACHING PARTS)		
-4	212-0597-00			4		SCREW,MACHINE:10-32 X 0.50 INCH,STL	80009	212-0597-00
-5	386-1624-00			2		PL,RET.,HANDLE:	80009	386-1624-00
-6	386-1283-00			2		PLATE,HDL MTG:PLASTIC	80009	386-1283-00
						- - - * - - -		
-7	390-0193-00			1		COVER,SCOPE:LEFT SIDE	80009	390-0193-00
	214-0812-00			4		. FASTENER,PAWL:	80009	214-0812-00
-8	386-0226-00			1		. . PL,LATCH LKG:FOR 0.080 INCH THICKNESS	80009	386-0226-00
-9	386-0227-00			1		. . PL,LATCH INDEX:	80009	386-0227-00
-10	214-0604-00			1		. . WASH.,SPG TNSN:0.26 ID X 0.47 INCH OD	80009	214-0604-00
-11	214-0603-01			1		. . PIN,SECURING:0.27 INCH LONG	80009	214-0603-01
-12	390-0192-00			1		COVER,SCOPE:RIGHT SIDE	80009	390-0192-00
	214-0812-00			4		. FASTENER,PAWL:	80009	214-0812-00
-13	386-0226-00			1		. . PL,LATCH LKG:FOR 0.080 INCH THICKNESS	80009	386-0226-00
-14	386-0227-00			1		. . PL,LATCH INDEX:	80009	386-0227-00
-15	214-0604-00			1		. . WASH.,SPG TNSN:0.26 ID X 0.47 INCH OD	80009	214-0604-00
-16	214-0603-01			1		. . PIN,SECURING:0.27 INCH LONG	80009	214-0603-01
-17	390-0190-00			1		COVER,SCOPE:BOTTOM	80009	390-0190-00
	214-0812-00			4		. FASTENER,PAWL:	80009	214-0812-00
	----- -----			-		. . EACH LATCH ASSEMBLY INCLUDES:		
-18	386-0226-00			1		. . PL,LATCH LKG:FOR 0.080 INCH THICKNESS	80009	386-0226-00
-19	386-0227-00			1		. . PL,LATCH INDEX:	80009	386-0227-00
-20	214-0604-00			1		. . WASH.,SPG TNSN:0.26 ID X 0.47 INCH OD	80009	214-0604-00
-21	214-0603-01			1		. . PIN,SECURING:0.27 INCH LONG	80009	214-0603-01
-22	348-0073-00			2		. . SPT PIVOT,FLIP:LEFT FRONT AND RIGHT REAR	80009	348-0073-00
						(ATTACHING PARTS FOR EACH)		
-23	211-0532-00			2		. . SCREW,MACHINE:6-32 X 0.75 INCH,FILH STL	83385	OBD
-24	210-0457-00			2		. . NUT,PLAIN,EXT W:6-32 X 0.312 INCH,STL	83385	OBD
						- - - * - - -		
-25	348-0208-00			2		. FOOT,CABINET:LEFT FRONT AND RIGHT REAR	80009	348-0208-00
-26	348-0074-00			2		. SPT PIVOT,FLIP:RIGHT FRONT AND LEFT REAR	80009	348-0074-00
						(ATTACHING PARTS FOR EACH)		
-27	211-0532-00			2		. SCREW,MACHINE:6-32 X 0.75 INCH,FILH STL	83385	OBD
-28	210-0457-00			2		. NUT,PLAIN,EXT W:6-32 X 0.312 INCH,STL	83385	OBD
						- - - * - - -		
-29	348-0207-00			2		FOOT,CABINET:RIGHT FRONT AND LEFT REAR	80009	348-0207-00
-30	348-0275-00			1		FLIPSTAND,CAB.:	80009	348-0275-00
-31	212-0105-00			2		SCREW,MACHINE:8-32 X 0.312",HEX HD STL	80009	212-0105-00
-32	212-0008-00			2		SCREW,MACHINE:8-32 X 0.312 INCH,PNH STL	83385	OBD
-33	210-0008-00			2		WASHER,LOCK:INTL,0.172 ID X 0.331"OD,STL	78189	1208-00-00-0541C
-34	361-0388-00			2		SPACER,PLATE:	80009	361-0388-00
-35	343-0256-00			2		RTNR BLK,SCOPE:	80009	343-0256-00
						(ATTACHING PARTS FOR EACH)		
-36	211-0531-00			2		SCREW,MACHINE:6-32 X 0.375,FIL,STL	83385	OBD
						- - - * - - -		

Fig. & Index No.	Tektronix Part No.	Serial/Model No. Eff	Dscont	Qty	1 2 3 4 5	Name & Description	Mfr Code	Mfr Part Number
3-1	351-0195-00			1		SLIDE,DWR,EXT:SLIDE,PAIR(RACKMOUNT ONLY)	06666	C719
-2	351-0104-00			1		SLIDE SECT.,DWR:PAIR	80009	351-0104-00
						(ATTACHING PARTS)		
-3	212-0004-00			6		SCREW,MACHINE:8-32 X 0.312 INCH,PNH STL	83385	OBD
	210-0858-00			6		WASHER,FLAT:0.500 OD X 0.171 ID X 0.063 THK	80009	210-0858-00
						- - - * - - -		
-4	407-0899-02			1		BRACKET,RACK MT:	80009	407-0899-02
						(ATTACHING PARTS)		
-5	212-0040-00			2		SCREW,MACHINE:8-32 X 0.375 100 DEG,FLH STL	83385	OBD
						- - - * - - -		
-6	407-0899-00			1		BRACKET,RACK MT:	80009	407-0899-00
						(ATTACHING PARTS)		
-7	212-0040-00			2		SCREW,MACHINE:8-32 X 0.375 100 DEG,FLH STL	83385	OBD
						- - - * - - -		
-8	390-0191-00			1		COVER,SCOPE:	80009	390-0191-00
	214-0812-00			4		. FASTENER,PAWL:	80009	214-0812-00
-9	386-0226-00			1		. . PL,LATCH LKG:FOR 0.080 INCH THICKNESS	80009	386-0226-00
-10	386-0227-00			1		. . PL,LATCH INDEX:	80009	386-0227-00
-11	214-0604-00			1		. . WASH.,SPG TNSN:0.26 ID X 0.47 INCH OD	80009	214-0604-00
-12	214-0603-01			1		. . PIN,SECURING:0.27 INCH LONG	80009	214-0603-01
-13	390-0194-00			1		COVER,SCOPE:	80009	390-0194-00
	214-0812-00			2		. FASTENER,PAWL:	80009	214-0812-00
-14	386-0226-00			1		. . PL,LATCH LKG:FOR 0.080 INCH THICKNESS	80009	386-0226-00
-15	386-0227-00			1		. . PL,LATCH INDEX:	80009	386-0227-00
-16	214-0604-00			1		. . WASH.,SPG TNSN:0.26 ID X 0.47 INCH OD	80009	214-0604-00
-17	214-0603-01			1		. . PIN,SECURING:0.27 INCH LONG	80009	214-0603-01
-18	390-0222-00			2		COVER,SCOPE:	80009	390-0222-00
	214-0812-00			4		. FASTENER,PAWL:	80009	214-0812-00
-19	386-0226-00			1		. . PL,LATCH LKG:FOR 0.080 INCH THICKNESS	80009	386-0226-00
-20	386-0227-00			1		. . PL,LATCH INDEX:	80009	386-0227-00
-21	214-0604-00			1		. . WASH.,SPG TNSN:0.26 ID X 0.47 INCH OD	80009	214-0604-00
-22	214-0603-01			1		. . PIN,SECURING:0.27 INCH LONG	80009	214-0603-01
-23	212-0103-00			3		SCREW,MACHINE:8-32 X 0.375 HEX HD,STL	77250	OBD
	212-0104-00			3		SCREW,MACHINE:8-32 X 0.75 HEX HD,STL	80009	212-0104-00
-24	210-0008-00			10		WASHER,LOCK:INTL,0.172 ID X 0.331"OD,STL	78189	1208-00-00-0541C
-25	361-0389-00			1		SPACER,PLATE:	80009	361-0389-00

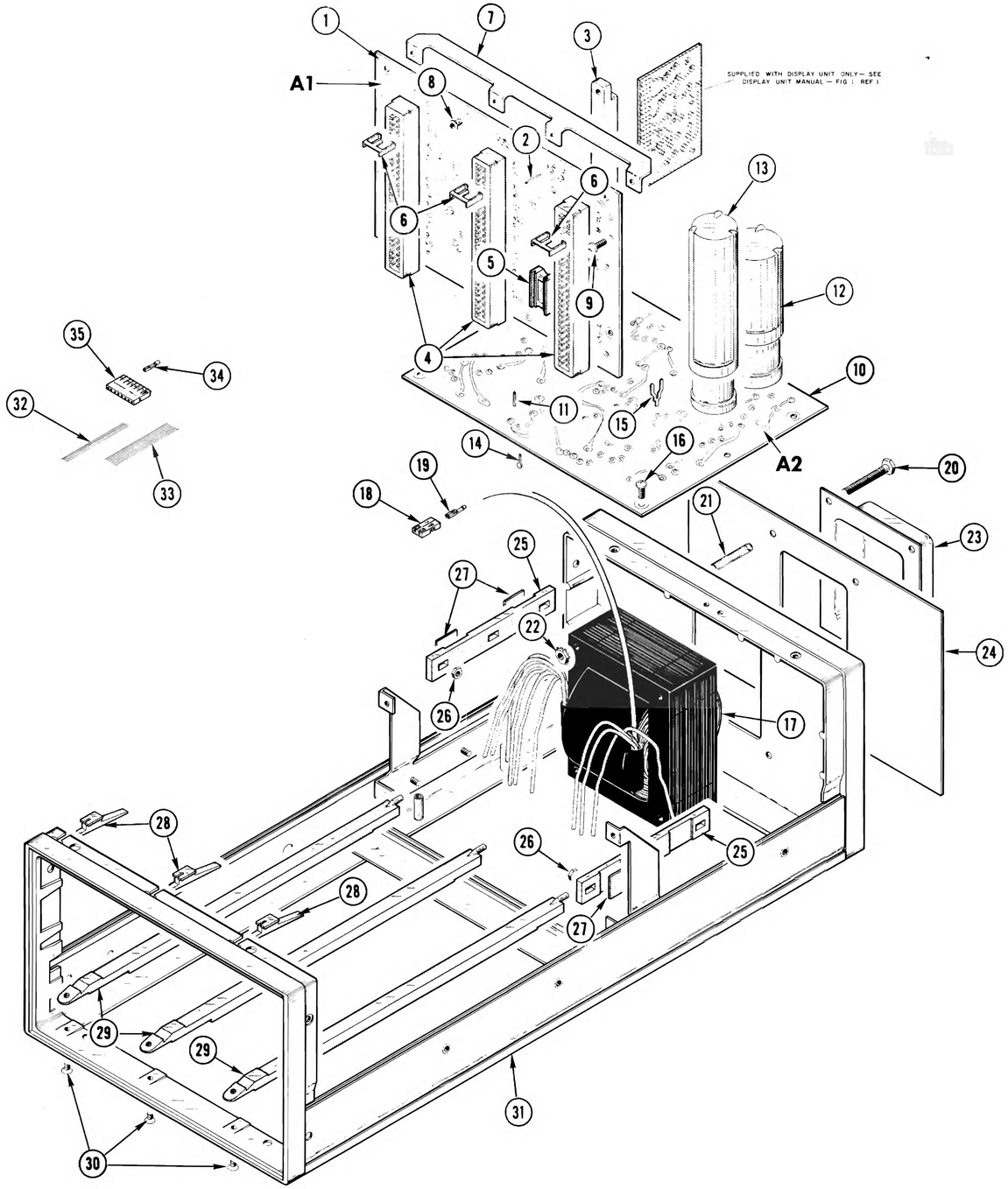
SUPPLIED WITH DISPLAY UNIT ONLY — SEE DISPLAY UNIT MANUAL — FIG 1 REF 1
A1
A2
1
2
3
4
5
6
7
8
9
10
11
12
13
14
15
16
17
18
19
20
21
22
23
24
25
26
27
28
29
30
31
32
33
34
35

FIG. 2 BENCH CABINET

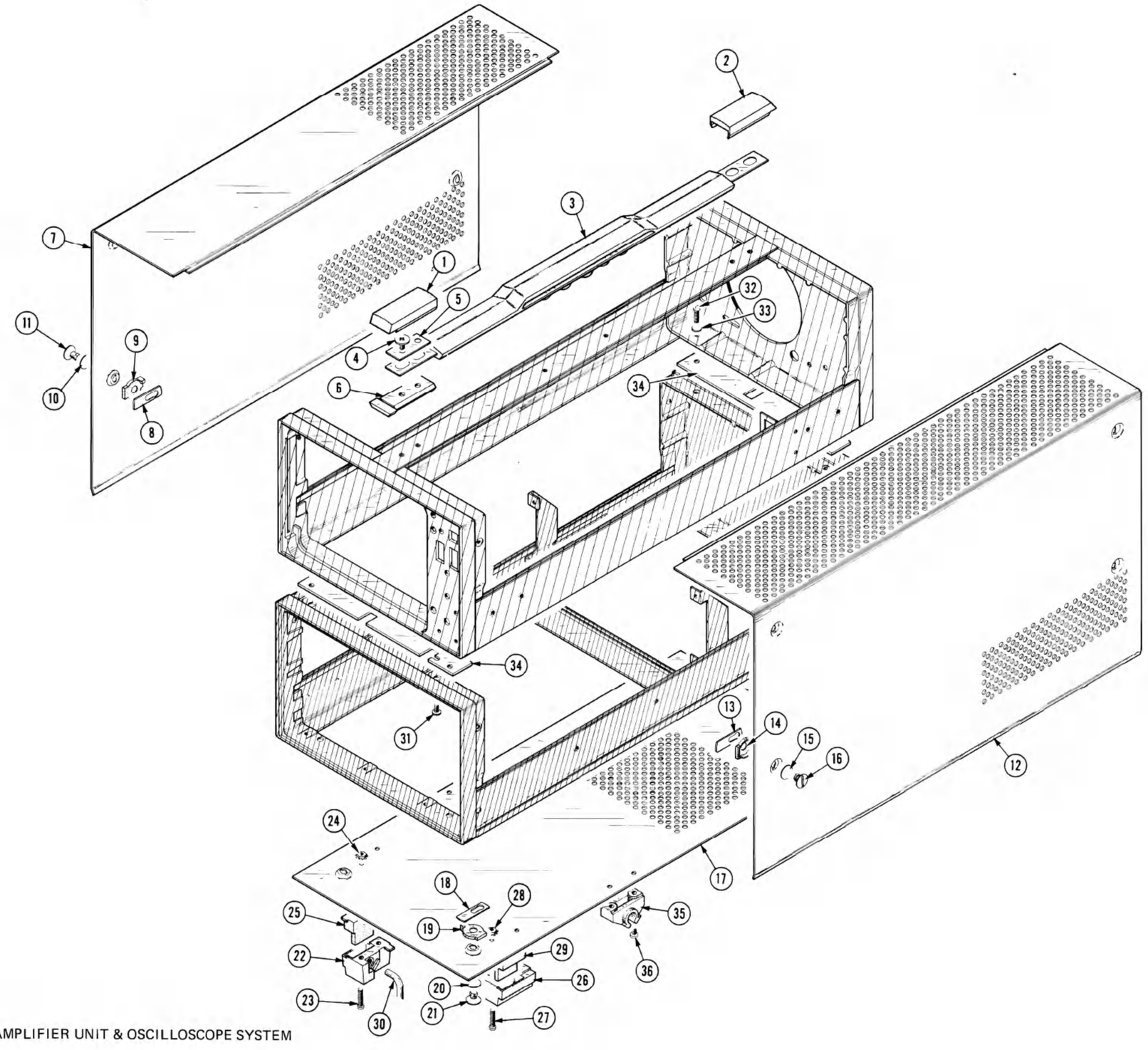

5103N POWER SUPPLY/AMPLIFIER UNIT & OSCILLOSCOPE SYSTEM

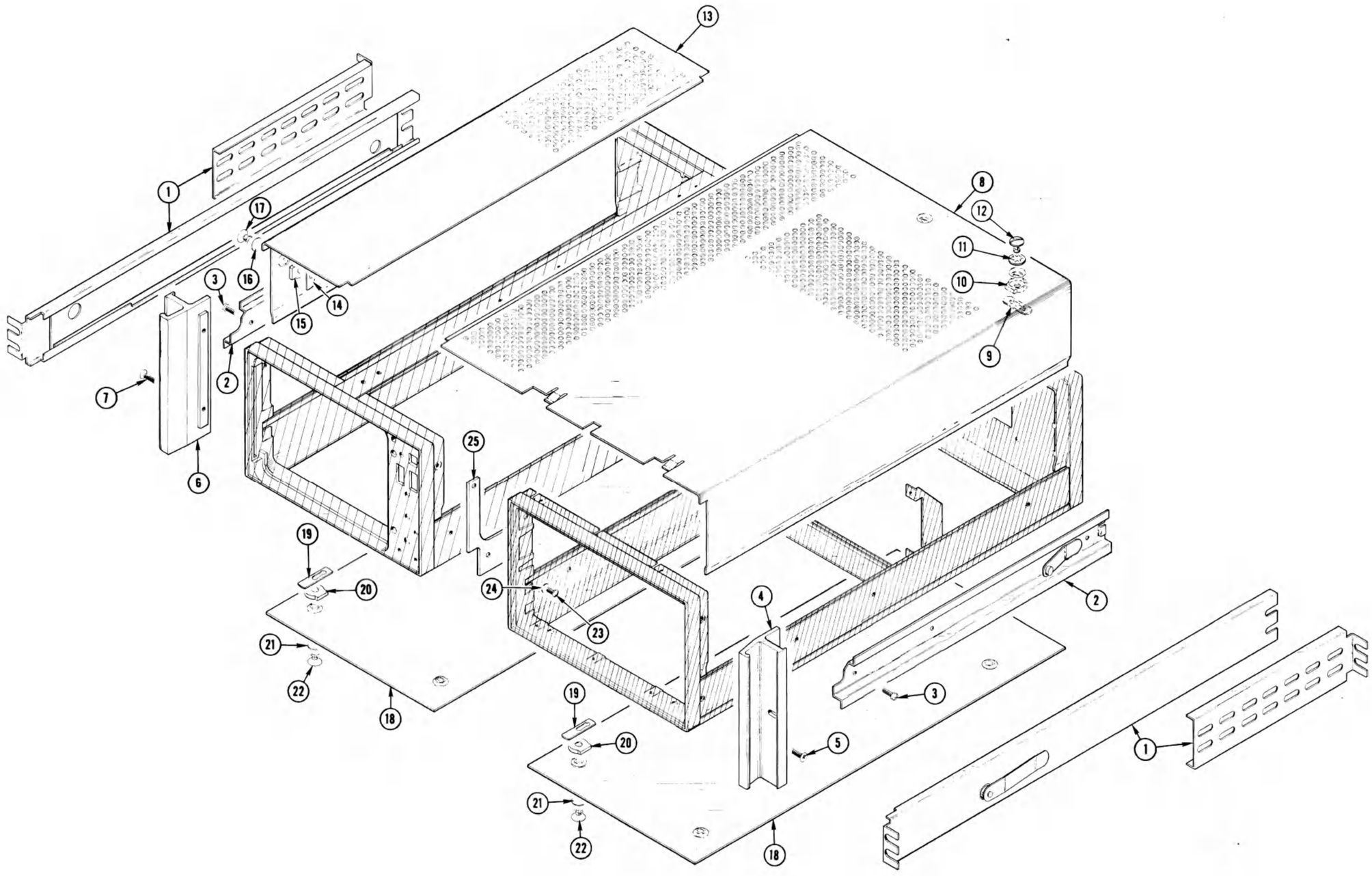

FIG. 3 RACKMOUNT CABINET

Fig. & Index No.	Tektronix Part No.	Serial/Model No. Eff	Dscon*	Qty 1 2 3 4 5	Name & Description	Mfr Code	Mfr Part Number
	070-1143-00			1	MANUAL, INSTRUCTION (NOT SHOWN)		

MANUAL CHANGE INFORMATION

At Tektronix, we continually strive to keep up with latest electronic developments by adding circuit and component improvements to our instruments as soon as they are developed and tested.

Sometimes, due to printing and shipping requirements, we can't get these changes immediately into printed manuals. Hence, your manual may contain new change information on following pages.

A single change may affect several sections. Since the change information sheets are carried in the manual until all changes are permanently entered, some duplication may occur. If no such change pages appear following this page, your manual is correct as printed.

SERVICE NOTE

Because of the universal parts procurement problem, some electrical parts in your instrument may be different from those described in the Replaceable Electrical Parts List. The parts used will in no way alter or compromise the performance or reliability of this instrument. They are installed when necessary to ensure prompt delivery to the customer. Order replacement parts from the Replaceable Electrical Parts List.

CALIBRATION TEST EQUIPMENT REPLACEMENT

Calibration Test Equipment Chart

This chart compares TM 500 product performance to that of older Tektronix equipment. Only those characteristics where significant specification differences occur, are listed. In some cases the new instrument may not be a total functional replacement. Additional support instrumentation may be needed or a change in calibration procedure may be necessary.

Comparison of Main Characteristics

DM 501 replaces 7D13		
PG 501 replaces 107	PG 501 - Risetime less than 3.5 ns into 50 Ω.	107 - Risetime less than 3.0 ns into 50 Ω.
108	PG 501 - 5 V output pulse; 3.5 ns Risetime.	108 - 10 V output pulse; 1 ns Risetime.
111	PG 501 - Risetime less than 3.5 ns; 8 ns Pretrigger pulse delay.	111 - Risetime 0.5 ns; 30 to 250 ns Pretrigger Pulse delay.
114	PG 501 - ±5 V output.	114 - ±10 V output. Short proof output.
115	PG 501 - Does not have Paired, Burst, Gated, or Delayed pulse mode; ±5 V dc Offset. Has ±5 V output.	115 - Paired, Burst, Gated, and Delayed pulse mode; ±10 V output. Short-proof output.
PG 502 replaces 107		
108	PG 502 - 5 V output	108 - 10 V output.
111	PG 502 - Risetime less than 1 ns; 10 ns Pretrigger pulse delay.	111 - Risetime 0.5 ns; 30 to 250 ns Pretrigger pulse delay.
114	PG 502 - ±5 V output	114 - ±10 V output. Short proof output.
115	PG 502 - Does not have Paired, Burst, Gated, Delayed & Undelayed pulse mode; Has ±5 V output.	115 - Paired, Burst, Gated, Delayed & Undelayed pulse mode; ±10 V output. Short-proof output.
2101	PG 502 - Does not have Paired or Delayed pulse. Has ±5 V output.	2101 - Paired and Delayed pulse; 10 V output.
PG 506 replaces 106	PG 506 - Positive-going trigger output signal at least 1 V; High Amplitude output, 60 V.	106 - Positive and Negative-going trigger output signal, 50 ns and 1 V; High Amplitude output, 100 V.
067-0502-01	PG 506 - Does not have chopped feature.	0502-01 - Comparator output can be alternately chopped to a reference voltage.
SG 503 replaces 190, 190A, 190B	SG 503 - Amplitude range 5 mV to 5.5 V p-p.	190B - Amplitude range 40 mV to 10 V p-p.
191	SG 503 - Frequency range 250 kHz to 250 MHz.	191 - Frequency range 350 kHz to 100 MHz.
067-0532-01	SG 503 - Frequency range 250 kHz to 250 MHz.	0532-01 - Frequency range 65 MHz to 500 MHz.
TG 501 replaces 180, 180A	TG 501 - Marker outputs, 5 sec to 1 ns. Sinewave available at 5, 2, and 1 ns. Trigger output - slaved to marker output from 5 sec through 100 ns. One time-mark can be generated at a time.	180A - Marker outputs, 5 sec to 1 μs. Sinewave available at 20, 10, and 2 ns. Trigger pulses 1, 10, 100 Hz; 1, 10, and 100 kHz. Multiple time-marks can be generated simultaneously.
181	TG 501 - Marker outputs, 5 sec to 1 ns. Sinewave available at 5, 2, and 1 ns.	181 - Marker outputs, 1, 10, 100, 1000, and 10,000 μs, plus 10 ns sinewave.
184	TG 501 - Marker outputs, 5 sec to 1 ns. Sinewave available at 5, 2, and 1 ns. Trigger output - slaved to marker output from 5 sec through 100 ns. One time-mark can be generated at a time.	184 - Marker outputs, 5 sec to 2 ns. Sinewave available at 50, 20, 10, 5, and 2 ns. Separate trigger pulses of 1 and .1 sec; 10, 1, and .1 ms; 10 and 1 μs. Marker amplifier provides positive or negative time marks of 25 V min. Marker intervals of 1 and .1 sec; 10, 1, and .1 ms; 10 and 1 μs.
2901	TG 501 - Marker outputs, 5 sec to 1 ns. Sinewave available at 5, 2, and 1 ns. Trigger output - slaved to marker output from 5 sec through 100 ns. One time-mark can be generated at a time.	2901 - Marker outputs, 5 sec to 0.1 μs. Sinewave available to 50, 10, and 5 ns. Separate trigger pulses, from 5 sec to 0.1 μs. Multiple time-marks can be generated simultaneously.

NOTE: All TM 500 generator outputs are short-proof. All TM 500 plug-in instruments require TM 500-Series Power Module.

REV. A, OCT 1975

TABLE OF CONTENTS

SECTION 1 SPECIFICATION	Page
D11 General Description	1-1
Table 1-1 Electrical Characteristics	1-1

SECTION 2 OPERATING INSTRUCTIONS	
Preliminary Information	2-1
Controls and Connectors	2-1
Basic Operation	2-1
Setup Information	2-1
Calibration Check	2-2
Beam Finder	2-2
External Intensity Input	2-2
Storage Operation	2-3
General Operating Information	2-3
Graticule	2-3
Intensity Control	2-3
Display Focus	2-3
Trace Alignment Adjustment	2-3
Beam Finder	2-3
Care of Storage Screens	2-4
Storage Operation	2-4
Intensity Modulation	2-4
Calibrator	2-5
Display Photography	2-5
Oscilloscope Applications	2-5

SECTION 3 CIRCUIT DESCRIPTION	
Block Diagram Description	3-1
Detailed Circuit Description	3-1
Deflection Amplifiers	3-1
CRT Circuit	3-1
High-Voltage Regulator	3-2
High Voltage Outputs	3-2
CRT Control Circuits	3-2
Storage Circuit	3-3

SECTION 4 CALIBRATION	
Instrument Maintenance	4-1
Services Available	4-1
Test Equipment Required	4-1
Calibration Equipment Alternatives	4-1
Special Calibration Fixtures	4-1
Test Instruments	4-1
Accessories	4-1
Short-Form Procedure and Index	4-2
Calibration Procedure	4-2
Preparation	4-2
Initial Control Settings	4-2

SECTION 5 ELECTRICAL PARTS LIST

SECTION 6 DIAGRAMS

Symbols and Reference Designators
Schematic Diagrams and Component Board Locations

SECTION 7 MECHANICAL PARTS LIST

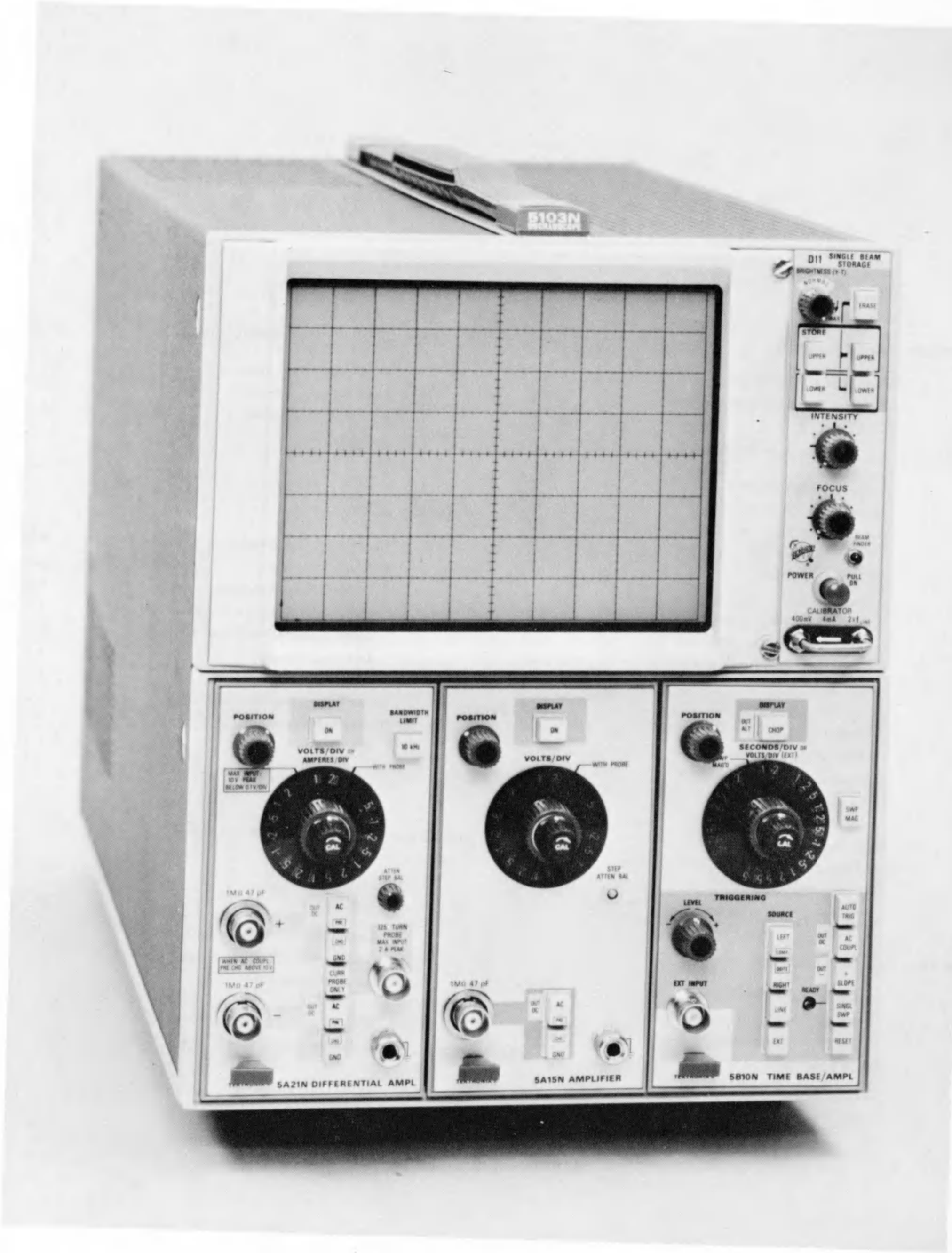

Fig. 1-1. 5103N Oscilloscope with a Single-Beam Storage Display Unit.

SECTION 1
SPECIFICATION

The D11/D15 Single-Beam Storage Display unit provides a single-beam cathode-ray tube (CRT) display for Tektronix 5100-series Oscilloscopes, and can be operated in the storage mode (retention of a display) or the conventional mode (non-store). The display module is operated with a power supply/amplifier module, and comprises one-half of the oscilloscope mainframe. It has a direct-view, bistable storage tube with two 4 X 10 division screens, which can be independently controlled for split-screen applications. A variable Brightness control permits extended storage time and can be used to integrate fast repetitive displays. The CRT also employs electrostatic deflection and has an 8 X 10 division (one-half inch per division) internal black graticule. A bright display is provided by a 3.5-kilovolt accelerating potential. Provision is made for application of Z-axis signals, and a front-panel loop provides a calibration signal.

The following electrical characteristics apply over an ambient temperature range of 0°C to +50°C. Refer to the 5100-series Oscilloscope System manual for environmental characteristics.

TABLE 1-1
ELECTRICAL CHARACTERISTICS

Characteristic	Performance Requirement	Supplemental Information
Cathode-Ray Tube		
Phosphor	Similar to P1.	
CRT Accelerating Voltage		3.5 kilovolts.
Orthogonality		90°, within 1°.
Geometry		0.1 division or less.
Storage Display		
Writing Speed	D11: At least 20 divisions/millisecond. D15: At least 200 divisions/millisecond.	D15: At least 800 divisions/millisecond enhanced.
Storage Time	One hour.	Longer at low brightness.
Erase Time		About 250 milliseconds.
External Intensity Input		
Useful Input Voltage	+5 volts will turn on display to a normal brightness level from an off level; −5 volts will turn display off from a normal brightness level.	
Usable Frequency Range	DC to one megahertz.	
Input R and C		About 10 kilohms, paralleled by about 40 picofarads.
Maximum Safe Input		+50 volts (DC + peak AC).
Calibrator		
Voltage	400 millivolts, within 1%.	
Current	4 milliamperes, within 1%.	
Frequency	Twice the line frequency.	

TABLE 1-1 (cont)

Characteristic	Performance Requirement	Supplemental Information
Power Input		
Line Voltage (RMS)		
With standard transformer	Nominal 110 V, 120 V; within 10%.	
With optional export transformer	Nominal 100 V, 110 V, 120 V, 200 V, 220 V, 240 V; within 10%.	
Line Frequency Range		
With standard transformer		60 hertz and 400 hertz.
With optional export transformer		50 to 60 hertz and 400 hertz.
Power Consumption (including Power Supply/ Amplifier module)		140 watts maximum.

SECTION 2
OPERATING INSTRUCTIONS

Introduction

The D11/D15 Single Beam Storage display module operates with a Tektronix 5100N-series power supply/amplifier module to form an oscilloscope mainframe. An understanding of the D11/D15 operation and capabilities is essential for obtaining best results. This section of the manual gives a brief functional description of the front-panel controls and connectors, a familiarization procedure, and general operating information.

Preliminary Information

The Operating Instructions section of the 5100N Oscilloscope System instruction manual should be referred to for initial preparation. It contains information for installation of modules and plug-ins, correct operating voltage and temperature, and general oscilloscope usage.

CONTROLS AND CONNECTORS

This is a brief description of the function or operation of the front-panel controls and connectors. More detailed information is given under General Operating Information.

INTENSITY	Controls display brightness.
FOCUS	Provides adjustment to obtain a well-defined display.
BEAM FINDER	Brings beam on screen; limits display to area inside graticule and intensifies beam.
POWER	Used to turn instrument power on and off.
UPPER and LOWER STORE	Button pushed in selects storage operation. Button out selects normal operation without storage. Each button has push-push action and operates independently of the other.
UPPER AND LOWER ERASE/ENHANCE	Self-cancelling switch selects screen to be erased or enhanced. Both buttons pushed in selects both screens.
ERASE	Momentary contact pushbutton initiates erasure of the storage display selected to be erased.
BRIGHTNESS (Y-T)	Provides continuously variable flood-gun current duty cycle from about 10% to 100%, permitting the intensity of a stored display to be varied. Permits extended retention of displayed information; also serves as an integrator for storing fast, repetitive signals.
ENHANCE (D15)	Provides additional writing speed capability for single-sweep storage. Enhance level may be adjusted to increase the writing speed capability as desired.
CALIBRATOR Loop	Provides positive-going accurate 400-millivolt and 4-milliampere square wave at a frequency of twice the line frequency for calibration and probe compensation.
EXT INTENSITY INPUT Connector (Rear Panel)	Permits application of Z-axis signals to the CRT (DC coupled). Positive-going signal increases intensity.
TRACE ROTATION (Rear Panel)	Permits alignment of the trace with respect to the graticule lines.

BASIC OPERATION

General

The following steps demonstrate the use of the controls and connectors of the D11/D15. It is recommended that this procedure be followed completely for familiarization with this instrument.

Setup Information

1. Make sure the oscilloscope system is complete. The D11/D15 must be properly connected to the power supply/amplifier module and the single-beam auxiliary board must be installed on the plug-in interface board. A 5A-series amplifier plug-in should be in one of the vertical (left or center) plug-in compartments and a 5B-series time-base plug-in unit should be in the horizontal (right) compartment.

TURN ON PROCEDURE

Follow this procedure when first receiving the instrument and when it has been turned OFF for two weeks or more.

Turn BRIGHTNESS control fully CW.

Place the push-push STORE switches (UPPER & LOWER) in the depressed position. Turn the power ON and note that after a short delay the screen will become fully illuminated. Leave the instrument in this mode for 5 minutes before erasing or going to non-store mode.

This procedure reduces the ion content in the CRT and maximizes life.

2. Set the POWER switch to off (pushed in) and connect the D11/D15 to a power source that meets the voltage and frequency requirements of this instrument. See Operating Voltage (Preliminary Procedure) in the Operating Instructions section of the 5100N Oscilloscope System manual.

3. Turn the INTENSITY control counterclockwise and pull the POWER switch out to turn the instrument on. Set the front-panel controls as follows:

D11/D15

FOCUS	Centered
UPPER and LOWER STORE	Non-store (buttons out)
BRIGHTNESS (Y-T)	Clockwise

Amplifier Plug-in

Display	On
Position	Centered
Volts/Div	.1
Variable Volts/Div	Cal (fully clockwise)
Input Coupling	DC

Time-Base Plug-in

Display	Alternate (button out)
Position	Centered
Seconds/Div	5 ms
Variable Seconds/Div	Cal (fully clockwise)
Sweep Magnifier	Off
Triggered Level	Counterclockwise
Triggering Source	Left (or Right if the Amplifier Plug-in is in the center compartment)
Triggering/Sweep Mode	Auto Trig, DC Coupling, + Slope, Normal Sweep

4. Advance the INTENSITY control until the trace is at the desired viewing level. The trace should appear near the graticule center.

5. Connect a 1X probe or test lead from the CALIBRATOR loop to the amplifier plug-in input connector.

6. Turn the Triggering Level control clockwise until a stable display is obtained. Adjust the vertical and horizontal Position controls so the display is centered vertically and starts at the left edge of the graticule.

7. Adjust the FOCUS control for a sharp, well-defined display over the entire trace length.

8. Disconnect the input signal and position the trace vertically so it coincides with the center horizontal line of the graticule.

9. If the trace is not parallel with the center horizontal line, see Trace Alignment Adjustment in this section.

Calibration Check

10. Move the trace two divisions below graticule center and reconnect the calibrator signal to the amplifier plug-in input connector.

11. The display should be four divisions in amplitude with six complete cycles (five complete cycles for 50-hertz line frequency) shown horizontally. An incorrect display indicates that the oscilloscope mainframe or plug-ins need to be recalibrated. See the Operating Instructions section of the 5100N Oscilloscope System manual for complete information.

Beam Finder

12. Move the display off-screen with the vertical Position control.

13. Push the BEAM FINDER button and observe that the display compresses into the screen area. Reposition the display to screen center and release the BEAM FINDER button.

©

External Intensity Input

14. Move the calibrator signal from the amplifier plug-in input connector to the EXT INTENSITY INPUT connector (located on the rear panel).

15. Set the Triggering Source to Line and slowly rotate the INTENSITY control counterclockwise until the trace appears to be a series of dimmed and brightened segments. The brightened segments correspond with the tops of the calibrator square waves.

Storage Operation

16. Move the calibrator signal from the EXT INTENSITY INPUT connector to the amplifier plug-in input connector.

17. Set the Triggering Source to Left, turn the INTENSITY control counterclockwise and press both the UPPER and LOWER STORE buttons. A background light level will be present on the storage screens.

18. Simultaneously press both the UPPER and LOWER ERASE screen-selector buttons and push the ERASE button to erase both screens and prepare the targets for storage.

19. Advance the INTENSITY control slowly in the clockwise direction to produce a waveform of normal intensity, then turn the control to the counterclockwise (minimum intensity) position. A stored waveform should remain on the storage screens.

20. Set the time-base plug-in to the Single Sweep Mode (Single Sweep button in).

21. Turn the BRIGHTNESS (Y-T) control counterclockwise and note that the stored display dims. Then turn the control clockwise to normal brightness.

22. To demonstrate independent screen operation, push the UPPER ERASE screen-selector button to release the LOWER ERASE button. Press the ERASE button and note that only the upper screen erases. Push the LOWER ERASE button (UPPER ERASE releases) and press the ERASE button. Set either screen to non-store (STORE button out) and note that the other screen is fully operable in the storage mode, permitting simultaneous store and non-store operation.

This completes the description of the basic operating procedure for the D11/D15. Instrument operations not explained here, or operations which need further explanation are discussed under General Operating Information.

GENERAL OPERATING INFORMATION

Graticule

The graticule of the D11/D15 is internally marked on the faceplate of the CRT to provide accurate, no-parallax measurements. The graticule is marked with eight vertical and ten horizontal divisions. Each division is one-half inch square. In addition, each major division is divided into five minor divisions. The vertical gain and horizontal timing are calibrated to the graticule so accurate measurements can be made from the graticule.

Intensity Control

The intensity of the display on the CRT is controlled by the INTENSITY control. This control is adjusted so the display is easily visible but not overly bright. It will probably require readjustment for different displays or sweep rates. Particular care should be exercised when only a spot is displayed. A high-intensity spot may burn the CRT phosphor and cause permanent damage to the CRT if allowed to remain too long.

Display Focus

If a well-defined display cannot be obtained with the FOCUS control, even at low intensity settings, adjustment of the internal astigmatism control may be required.

To check for proper setting of the Astig control, slowly turn the FOCUS control through the optimum setting with a signal displayed on the CRT screen. If the Astig control is correctly set, the vertical and horizontal portions of the trace will come into sharpest focus at the same position of the FOCUS control.

Trace Alignment Adjustment

If a free-running trace is not parallel with the horizontal graticule lines, set the TRACE ROTATION adjustment (rear panel) as follows: Position the trace to the center horizontal line and adjust the TRACE ROTATION control so the trace is parallel with the horizontal graticule lines.

Beam Finder

The BEAM FINDER switch provides a means of locating a display which overscans the viewing area either vertically or horizontally. When the BEAM FINDER switch is pressed, the display is compressed within the graticule area. To locate and reposition an overscanned display, use the following procedure:

1. Press the BEAM FINDER switch, and while holding it in, increase the vertical and horizontal deflection factors until the display is reduced to about two divisions vertically and four divisions horizontally (the horizontal deflection needs to be reduced only when in the X-Y mode of operation).

©

2. Adjust the vertical and horizontal position controls to center the display about the vertical and horizontal centerlines.

3. Release the BEAM FINDER switch; the display should remain within the viewing area.

Care of Storage Screens

To prolong the useful life of the storage screens, the following precautions should be observed when operating this instrument:

1. Use minimum beam intensity required to produce a clear, well-defined display. Care must be taken in the degree of writing-beam intensity that is used, particularly when using slow sweep rates and X-Y displays. Too-high beam intensity may permanently damage the CRT screen.

2. Avoid repeated use of the same area of the screen. If a particular display is being stored repeatedly, change the vertical position occasionally to use other portions of the display area.

3. Do not leave a stored display on the screen when it is no longer needed.

4. Turn the Store BRIGHTNESS (Y-T) control fully counterclockwise (with sweep held off) when storing a display for an extended period of time.

5. Operate in the non-store mode unless storage is required.

Storage Operation

General. Separate STORE switches are provided for both the upper and lower CRT storage screens, permitting independent screen operation. When both screens are operated in the non-store mode (both the UPPER and LOWER STORE switches out), the instrument operates as a conventional oscilloscope. When either or both screens are operated in the storage mode (applicable STORE switch in), a display can be retained for further analysis.

A stored display is erased by first selecting the applicable screen for erasure and then pushing the ERASE button. The erasure of one screen has no effect on the other. The UPPER and LOWER ERASE switches are self-cancelling; when either button is pressed, the other button is released. Also, both switches can be pressed in or released at the same time. Thus either screen or both can be selected for erasure, or erasure of both screens can be prevented. The ERASE momentary-contact switch initiates the voltage waveform required for erasure.

Holding and Viewing Modes. The BRIGHTNESS control permits extended retention of displayed information with negligible reduction in CRT life. The control provides continuously variable flood-gun current duty cycle from about 10% to 100%. To hold a stored display, set the time-base plug-in unit to Single Sweep and turn the control fully counterclockwise. In this position, the storage-target flood guns are on only 10% of the time, producing the effect of decreased intensity. A stored display will be very faint and may not be discernible from the background areas. Both screens are affected. To return the instrument to a viewing mode, turn the BRIGHTNESS control clockwise until the desired viewing level is achieved. In the full clockwise position, the flood guns are on 100% of the time and stored display will be its brightest. The BRIGHTNESS control is inoperable for X-Y displays and when the sweep is running. If the control is counterclockwise and the sweep is running, a blinking effect will be noticeable at the slower sweep rates because the CRT will revert to the hold mode between sweeps. To eliminate this effect, turn the control clockwise.

Integrating Fast Displays. If fast, repetitive displays cannot be stored even at maximum intensity settings, the BRIGHTNESS control can be used to increase the apparent writing speed of the CRT. To use this function, first obtain a triggered, well-focused display of the signal in the non-store mode. Adjust the writing-beam INTENSITY control so the trace is just starting to defocus. Then press in both STORE buttons and erase the screen. Turn the BRIGHTNESS control counterclockwise and press the STORE button to obtain the non-store mode. Wait about two seconds, press in both STORE buttons and rotate the BRIGHTNESS control clockwise to view the integrated display. If all portions of the display are not properly stored, rotate the BRIGHTNESS control counterclockwise and return to the non-store mode to integrate the display for a few more seconds. If too much integration time is used, the stored image begins to broaden, or background fade-up may occur, obscuring the desired display. Some practice may be necessary to determine the proper intensity level and integration time required for obtaining best results.

Improving Writing Speed. After continued use (2 hours or more) in the non-store mode, or store mode with no display, fade the screen positive by obtaining a repetitive sweep in the store mode. Slowly position the trace from CRT top to bottom. Leave the CRT target fully stored for five minutes.

©

Single-Sweep Enhancement (D15 Only). The Enhance feature of the D15 provides a method of storing single-sweep displays that exceed the normal writing speed of the CRT. The ENHANCE control is concentric with the INTENSITY control, and the screen to be enhanced must be pushbutton selected. Upon termination of the single sweep, a short-duration pulse is applied to the storage screen to briefly increase the storage level of the CRT. The ENHANCE control may be adjusted to increase the writing speed capability as desired.

Intensity Modulation

Intensity (Z-axis) modulation can be used to relate a third item of electrical phenomena to the vertical (Y-axis) and the horizontal (X-axis) coordinates without affecting the waveshape of the displayed signal. The Z-axis modulating signal applied to the EXT INTENSITY INPUT changes the intensity of the displayed waveform to provide this type of display. The voltage amplitude required for visible trace modulation depends on the setting of the INTENSITY control. About +5 volts will turn on the display to a normal brightness level from an off level, and about −5 volts will turn the display off from a normal brightness level. "Gray scale" intensity modulation can be obtained by applying signals between these levels. Maximum safe input voltage is + or − 50 volts. Usable frequency range of the Z-axis circuit is DC to one megahertz.

Time markers applied to the EXT INTENSITY INPUT provide a direct time reference on the display. With uncalibrated horizontal sweep or X-Y operation, the time markers provide a means of reading time directly from the display. However, if the markers are not time-related to the displayed waveform, a single-sweep display should be used (for internal sweep only) to provide a stable display.

Intensity modulation can be used in the store mode as well as in the non-store mode; however, there is only one intensity level in a stored display. The stored waveform may be modified by either dimming portions of the waveform so they do not store, or brightening portions from a dim background so only the brightened portions store.

Calibrator

The internal calibrator of the D11/D15 provides a convenient signal source for checking the basic vertical gain and sweep timing. The calibrator signal is also very useful for adjusting probe compensation as described in the probe instruction manual. The output square-wave voltage is 400 millivolts, within 1%, and the square-wave current is 4 milliamperes, within 1%. The frequency of the square-wave signal is twice the power-line frequency. The signal is obtained by clipping the probe to the loop.

Display Photography

A permanent record of the CRT display can be obtained with an oscilloscope camera system. The CRT bezel of the D11/D15 provides integral mounting for a Tektronix oscilloscope camera. A camera with a light source is required to illuminate the graticule. The instruction manuals for the Tektronix oscilloscope cameras include complete instructions for obtaining waveform photographs. The following specific information is given for photographing stored displays.

When this instrument is operated in the storage mode, a photograph may easily be composed by erasing unwanted displays as many times as necessary before the desired display is obtained. This ability to compose a photograph in advance prevents wasted film due to incorrect displays.

Due to the background glow of the stored display produced by the flood guns, special care must be taken in determining the exposure time and f-stop settings. Of course, exact settings will depend upon the specific type of film. After the correct settings are obtained for a specific oscilloscope-camera-film combination, record these figures for future reference. Since the background glow does not change substantially between displays, these settings should produce satisfactory results for most displays. Background glow may be altered by adjustment of the BRIGHTNESS control.

Oscilloscope Applications

The 5100N Oscilloscope, including its associated display module and plug-ins, provides a very flexible measurement system. Specific applications for the individual plug-ins are described in the manuals for those units. Refer to the Operating Instructions section of the 5100N Oscilloscope manual for basic oscilloscope applications, including peak-to-peak AC voltage measurements, instantaneous DC voltage measurements, comparison measurements, time duration measurements, determining frequency, risetime measurements, and X-Y measurements.

©

SECTION 3
CIRCUIT DESCRIPTION

Introduction

This section of the manual contains an electrical description of the circuits in the D11 and D15 Single-Beam Display Units. An overall block diagram and complete schematics are given on pullout pages at the rear of this manual.

BLOCK DIAGRAM DESCRIPTION

The Vertical and Horizontal Deflection Amplifiers provide final amplification for the signals from the plug-in units. They produce push-pull outputs suitable to drive the CRT vertical and horizontal deflection plates. Beam-finding circuitry is incorporated to limit the display within the screen area when the front-panel BEAM FINDER button is pressed. A variable capacitor between the output lines of the Vertical Deflection Amplifier permits adjustment of the inherent phase shift between the vertical and horizontal deflection systems to zero degrees.

The CRT Circuit produces the high voltage (about −3.4 kilovolts) and contains the controls necessary for operation of the cathode-ray tube. The CRT Circuit also contains the Z-Axis Amplifier, which provides the drive signal to control the intensity level of the display.

The Storage Circuit provides the voltage levels necessary to operate the storage elements associated with the CRT. The circuit includes the erase-pulse generator for erasing stored information and a multivibrator which permits the flood-gun duty cycle to be varied.

DETAILED CIRCUIT DESCRIPTION

Deflection Amplifiers

Vertical Deflection Amplifier. The Vertical Deflection Amplifier provides the final amplification of signals applied to the vertical plug-in units. It produces a push-pull output sufficient to drive the CRT vertical deflection plates. The amplifier consists of Q104, Q106, Q114, and Q116, connected in a differential configuration.

The input signal arrives via P612 from the plug-in interface circuit (power supply/amplifier module). The output signal is developed across the collector-load resistors, R104 and R114, and is about 50 times the magnitude of the input signal. R116, Vert Gain, provides Q106-Q116 emitter degeneration to set the gain of the stage to provide a calibrated vertical display.

Horizontal Deflection Amplifier. The Horizontal Deflection Amplifier consists of Q124, Q126, Q134, and Q136, and is basically the same as the Vertical Deflection Amplifier just described. It provides final amplification of signals from the horizontal plug-in unit, which arrive via P611. Gain of the stage is set by R136, Horiz Gain, to provide a calibrated horizontal display.

Beam Finder. If a high-amplitude signal or a misadjusted control has deflected the trace or display off screen, it can be located by pressing the front-panel BEAM FINDER pushbutton. This opens S125, allowing current through R125 into the emitter circuits of both deflection amplifiers. R125 limits the current available to the transistors, and hence, to the collector-load resistors. Thus the dynamic range of the deflection plates is limited to an on-screen level, and the display is compressed within the viewing area.

Also, when the BEAM FINDER switch is pressed, the Z Axis Amplifier in the CRT Circuit senses the slight increase in voltage level at the R108-R118-R128-R138 junction. The Z Axis Amplifier produces a slight increase in CRT beam intensity.

X-Y Phasing. Variable capacitor C115, Phase, is connected across the output collectors of the Vertical Deflection Amplifier. This capacitor is adjusted to eliminate the inherent phase difference between the vertical and horizontal deflection systems when operating in the X-Y mode.

CRT Circuit

General. The CRT Circuit produces the high-voltage potential and provides the control circuits necessary for operation of the cathode-ray tube (CRT). This circuit also includes the Z-Axis Amplifier stage to set the intensity of the CRT display.

Z-Axis Amplifier. The Z-Axis Amplifier is a current driven shunt-feedback operational amplifier with a voltage output, and consists of Q222, Q226, and Q234. The feedback path is from the collectors of Q226 and Q234 through

R227-C227 to the base of Q222. Q226 and Q234 are connected as a collector-coupled complementary amplifier to provide a fast, linear output signal while consuming minimum quiescent power. The output voltage provides the drive signal to control the CRT intensity level through the Control-Grid Supply.

The output level of the Z-Axis Amplifier is established by the voltage drop across R227 with reference to virtual ground at the base of Q222 (the operational amplifier summing point). The current through R227 is determined by the input current from any combination of several sources, such as from the front-panel INTENSITY control, plug-in interface (blanking, intensification, etc.), and from Q214. Q214 is an operational amplifier with two inputs; one from the rear-panel EXT INTENSITY INPUT connector and the other from the front-panel BEAM FINDER switch. It sets those input signals to a level suitable for proper response by the Z-Axis Amplifier.

High-Voltage Regulator

High-Voltage Primary. A repetitive, non-sinusoidal signal is produced by a phase-modulated switching circuit in the primary of T240 and induced into the secondaries. Current drive for the primary winding is furnished by Q252 in its conduction state. Q252 is turned on by positive-going feedback applied through C259 and L259 from the feedback winding, and then turned off by switching action from Q262. A sample of the output DC voltage is modulated by the AC from another feedback winding at the gate of Q278 to establish the conduction time of Q252 and thus maintain the proper output level. Q252 delivers energy to T240 only once each cycle.

Assuming Q262 and Q264 are off initially, R262 provides base drive for Q252, causing it to deliver current to T240 primary. As Q252 conducts, the increasing current through the primary winding induces a voltage into the secondaries. The gate of Q278 is driven negative by the voltage from the feedback winding, switching Q264 and Q262 on. With conduction of Q262, base drive for Q252 is removed.

With Q252 off, the transformer field collapses, reversing the polarity of the voltage induced into the secondaries. When the gate of Q278 is driven sufficiently positive to switch Q264 and Q262 off, Q252 is switched on again. Q252 again delivers energy to the primary winding and the action is repeated.

High-Voltage Regulation. Regulation is accomplished as follows: Feedback from the −3400-volt cathode supply is summed with low-voltage level through the voltage divider consisting of resistors R272B-E, R275, and R276 to establish the DC level at the gate of Q278. The AC component, which is the switching signal, is derived from the transformer as described previously. If the output level of the cathode supply drops below the nominal −3400 volts (becomes more positive), the level at the gate of Q278 rises. A new point is selected on the varying AC component to cause switching of Q262-Q264 later and hence increase conduction time of Q252. This allows more energy to be delivered to the primary winding of T240, resulting in an increase of voltage in the secondaries. Conversely, if the output level increases, Q252 is allowed to conduct for a shorter length of time. The DC level at the gate of Q278 is adjusted by R275, H.V. Adj, to set the output at exactly −3400 volts.

High Voltage Outputs

Transformer T240 has two high-voltage output windings which provide the potentials required for the CRT cathode and control grid supplies. The −3400-volt accelerating potential for the cathode is supplied by half-wave rectifier CR247. The cathode heater is elevated to the cathode potential through R273.

Half-wave rectifier CR241 provides about −3450 volts to establish bias voltage on the CRT control grid. This voltage (and hence the CRT beam current) is dynamically controlled by the Z-Axis Amplifier, which contains the INTENSITY control, blanking inputs, and intensification inputs. R245, Int Range, provides a fine adjustment of the quiescent grid voltage to bias the CRT just below cutoff when the Z-Axis Amplifier output is at its minimum quiescent level (INTENSITY control counterclockwise and no intensifying or blanking inputs).

Neon bulbs DS271, DS272, and DS273 provide protection to the CRT if the voltage difference between the control grid and the cathode exceeds about 180 volts.

CRT Control Circuits

In addition to the INTENSITY control discussed previously, front-panel FOCUS and internal astigmatism controls have been incorporated for arriving at an optimum CRT display. FOCUS control R295 provides the correct voltage for the second anode in the CRT. Proper voltage for the third anode is obtained by adjusting Astig control R286. In order to obtain optimum spot size and shape, both the FOCUS and Astig controls are adjusted to provide the proper electrostatic lens configuration in the CRT.

The Geom adjustment R285 varies the positive level on the horizontal deflection plate shields to control the overall

geometry of the display. The TRACE ROTATION control, R291, permits adjustment of the DC current through beam-rotation coil L291 to align the display with the horizontal graticule lines.

Storage Circuit

General. The CRT is a direct-view bistable storage cathode-ray tube with a split-screen viewing area that permits each half to be operated individually for stored displays. Only those elements associated with the storage capability of the CRT are shown in the CRT enclosure on the right side of the Storage Circuit schematic diagram. The writing gun, its deflection systems and associated elements have been discussed previously under CRT Circuit.

Storage Operation. Four low-energy electron guns (flood guns) provide full coverage of the large screen area. Each consists of a heated cathode and an anode. The cathode heaters, which receive an unfiltered pulsating DC from full-wave rectifier CR329, are elevated to the cathode potential through R329. Quiescently Q308 is saturated, providing current to the flood-gun cathodes. The anode potential is established by VR396 and supplied via emitter follower Q396.

The collimation electrode is a metallic band around the inner wall of the CRT envelope. It produces an electrostatic field to distribute the flood-gun electrons uniformly over the storage target. R390, CE1, provides adjustment of the flood electron trajectories to cover the extreme rim of the targets and optimize uniformity of the target coverage. Emitter follower Q392 maintains a stable voltage on the collimation electrode, providing a low-impedance current path to absorb current variations.

The storage screen consists of a thin tin oxide layer called the target backplate, which is coated with an insulator material containing finely-ground phosphor particles called the target. A positive voltage potential is applied via Q372 and S372 to the backplage to establish the operating level of the tube, which is the difference in potential between the backplate and the flood-gun cathodes. The CRT screen area is divided into two halves, which are electrically insulated from each other to permit independent operation.

The target operates in a bistable mode because of the secondary-emission properties of the insulator material. The first stable state is the rest potential, at which the target has gathered low-energy flood-gun electrons, causing it to charge down to the flood-gun cathode potential. The second stable state is the stored state, at which the target (or portions of it) is shifted to the backplate potential by increasing the secondary emission. While the flood guns do not have sufficient energy to shift the target to the stored state, they do supply sufficient energy to hold the target in the stored state after it has been shifted by the high-energy writing-gun beam (CRT beam). This is because the landing energy of the flood electrons has increased with the increased potential difference between the flood gun cathode and the target. These higher energy electrons produce a visual display as long as the flood gun beam covers the target.

When the stored display is no longer needed, the information is erased by first shifting the entire target to the stored state, and then removing the charge. A positive-going short-duration pulse is first applied to the backplate, increasing the flood-gun electron landing energy and writing the entire target area. Next, the backplate voltage is pulled well below the rest potential of the target, which follows due to its inherent capacitive coupling. Then, as the backplate is gradually returned to its quiescent potential, the target charges to the rest potential and is ready to write again.

Backplate Supply. A regulated +370-volt DC power supply is incorporated in the Storage Circuit to provide the storage level for the CRT and to ensure a potential sufficient for the erasure process. A winding of high-voltage transformer T240 supplies 400 volts RMS, which is rectified by CR386. Q386 and Q388 are connected as a feedback pair to provide the regulated +370-volt DC output. VR388 establishes the reference voltage, and R387, +370 V Adj, sets the current through Q386 to set the output level. VR387 is a protection device for the transistors, and is normally operated in a region of its characteristic curve below its Zener knee.

Backplate Control. Separate STORE switches, S375A and S375B, are provided for the target backplates to permit each storage screen to be operated individually. In the store mode, the store-level potential for the backplate is supplied by either Q372 or by the erase-generator output operational amplifier, depending upon the setting of the ERASE SELECT switches, S372A and S372B.

A high degree of control of target backplates is maintained by a feedback amplifier system consisting of Q356, Q358, Q362, and Q364. The operational amplifier summing point is at the base of Q356, and the feedback resistor is R355. Variable resistor R350, Store Level, provides an adjustment of the current to the null point and hence, sets the backplate voltage through R355 to an optimum storage level. R370, Store Bal, permits matching the backplate voltages for uniform screen luminance, whether they are selected for erasure or not. When either or both screens are operated in the store mode, the divider network in the high-voltage regulator circuit is modified to shift the high

voltage slightly, correcting for the deflection sensitivity changes that occur. The backplate voltage is applied through either R381 or R382 to the base of Q384, removing the ground potential from the Q384 collector. R385, Sens Correct, permits an adjustable sensitivity correction voltage to be applied to the high-voltage regulator.

Erase Generator. The previously discussed operational amplifier is driven by a monostable multivibrator when it is desired to erase a stored display. The multivibrator consists of Q334, which is normally on, and Q336, which is normally off. When ERASE button S330 is pressed, R330 is grounded, producing a negative-going step through C331 to cut Q334 off. Q336 turns on, and the negative-going step produced at its collector causes a corresponding positive-going step at the output of the operational amplifier. This positive-going step is applied to the target backplate, increasing the storage level and "writing" the entire target.

After an RC-controlled time of 10 milliseconds, the multivibrator reverts to its quiescent state, producing a positive-going step at the collector of Q336 as the transistor turns off. This positive-going step is coupled through C342, and the backplate is pulled negative through the action of the operational amplifier. The target is pulled well below its rest potential. As C342 charges, the voltage at the cathode of CR343 decays from about +20 volts toward the −30-volt supply at an RC-controlled rate until it is clamped at ground by conduction of CR343. This action allows the target backplate to be raised slowly to its operating level, while the target remains at the flood-gun cathode potential. The total time from initiation of erasure to the ready-to-write condition is about 250 milliseconds.

Flood-Gun Cathode Control. As previously mentioned, Q308 provides the current for the flood-gun cathodes. It operates at saturation, establishing a cathode potential of nearly −30 volts. Q308 is controlled by two circuits: a transistor switch activated by the sweep gate and a multivibrator. While the sweep is running, Q304 overrides the multivibrator output and holds Q308 in its conduction state. Emitter follower Q302 receives the sweep blanking input from R203 in the Z-Axis Amplifier circuit; however, the level of interest is the zero volts applied to the base of Q302 while the sweep is running. This level permits the base of Q304 to move slightly negative, biasing the transistor into saturation and grounding the collector of Q320. Through R307-R308 divider action, Q308 is held on.

Between sweeps or when the sweep is held off, the +5-volt sweep-blanking level is applied to Q302, raising its emitter positive. This level switches Q304 off, releasing its hold on Q308. In this condition, Q308 is controlled by collector-coupled multivibrator Q310-Q320. When Q320 conducts, Q308 conducts. Symmetry of the multivibrator is controlled by R313 and R325. R325, BRIGHTNESS, is adjustable to allow Q320 to conduct anywhere from 10% to 100% of the time. Thus the duty cycle of the flood-gun cathodes can be varied from 10% to 100%, which has the effect of varying the stored brightness.

Enhance Operation (D15 Only). Writing speed is primarily a function of the writing gun beam current density and physical properties of the storage tube. At very fast sweep speeds, the writing beam of a single sweep does not change the scanned portions of the target enough to shift them to the stored state. Writing beyond the normal writing speed of the CRT is attained through the process of enhancement. Upon termination of the single sweep, a short-duration pulse is applied to the target backplate, which increases the operating level slightly so that less writing current is required to shift the scanned section to the stored state.

When the sweep terminates, the sweep blanking pulse causes the Q302 emitter to snap positive. This positive-going transition is applied via C326 to the base of Q322. Monostable multivibrator Q322-Q328 changes states, producing a negative-going pulse at Q322 collector. The current level applied to the backplate operational amplifier null point (Q356 base) is adjustable by R315, ENHANCE, to control the amplitude of the positive enhance pulse applied to the target backplate.

SECTION 4
CALIBRATION

Introduction

This section of the manual contains a procedure to return the circuits of the D11/D15 to within their designed operating capabilities. Calibration is generally required after a repair has been made, or after long time intervals in which normal aging of components may affect instrument accuracy. For initial inspection to verify instrument operation, the Basic Operation procedure in Section 2 should be used (the instrument is checked with its covers on, using a minimum of peripheral equipment).

Instrument Maintenance

Before complete calibration, thoroughly clean and inspect this instrument as outlined in the Maintenance section of the Oscilloscope System manual. Also, the system manual contains information for general maintenance of this instrument, including preventive maintenance, component identification, and replacement, etc.

Services Available

Tektronix, Inc. provides complete instrument repair and calibration at local Field Service Centers and at the Factory Service Center. Contact your local Tektronix Field Office or representative for further information.

TEST EQUIPMENT REQUIRED

General

The following test equipment and accessories, or the equivalent, is required for complete calibration of the D11 or D15. Specifications given for the test equipment are the minimum necessary for accurate calibration. Therefore, some of the specifications listed here may be less rigorous than the actual performance capabilities of the test equipment. All test equipment is assumed to be correctly calibrated and operating within the listed specifications.

Calibration Equipment Alternatives

If other test equipment is substituted, control settings or calibration setup may need altering to meet the requirements of the equipment used. Detailed operating instructions for the test equipment are not given in this procedure. Refer to the instruction manual for the test equipment if more information is needed.

Special Calibration Fixtures

Special Tektronix calibration fixtures are used in this procedure only where they facilitate instrument calibration. These special calibration fixtures are available from Tektronix, Inc. Order by part number through your local Tektronix Field Office or representative.

Test Instruments

1. Vertical plug-in unit. Any two Tektronix 5A-series amplifiers can be used. The units should be of the same type for checking X-Y phase relationship.

2. Time-base plug-in unit. Tektronix 5B10N recommended.

3. DC voltmeter. Minimum sensitivity rating, 3500 volts full scale with an accuracy of at least 3%.

4. Low-frequency sine-wave generator. Frequency, 2 kilohertz to at least 100 kilohertz; output amplitude, from about 0.1 volt to 20 volts peak to peak into 50 ohms. For example, General Radio 1310-B Oscillator (use a General Radio 274-QBJ Adapter to provide BNC output).

5. Standard amplitude calibrator. Frequency, about one kilohertz; square-wave output amplitude, 0.2 volt. DC voltage outputs, + and −5 volts for checking Z-Axis input. Tektronix Calibration Fixture 067-0502-01 has all of these requirements.

Accessories

1. Coaxial cable. 50 ohms impedance, 42-inch length, BNC connectors. Tektronix Part No. 012-0057-01.

2. Dual-input cable. Provides matched signal paths to the X and Y channels; BNC connectors. Tektronix Part No. 067-0525-00.

3. Test lead to connect signal from the CALIBRATOR loop to the vertical input.

SHORT-FORM PROCEDURE AND INDEX

Serial No. _____

Calibration Date _____

Calibrated By _____

1. Check/Adjust Power Supplies Page 4-3

Low-Voltage Supplies: Check that each supply is within the tolerance listed in Table 4-1.

High-Voltage Supply: Meter reading between HV test point and ground is –3400 V, ±170 V. Adjust R275.

2. Check/Adjust CRT Operation Page 4-4

Intensity Range: Adjust R245 to establish proper CRT bias.

Astigmatism: Adjust R286 for sharp display.

Trace Alignment: Adjust TRACE ROTATION to align the trace parallel to the center graticule line.

Geometry: Adjust R285 for minimum curvature of traces at screen edges.

3. Check/Adjust Storage Operation Page 4-4

+370-Volt Supply: Meter reading between TP2 and ground is +370 V, ±7 V. Adjust R387 (+370 V Adj) for +370 volts.

Operating Level: Adjust R350 (Store Level) for best stored display with Erase Selector in.

Store Balance: Adjust R370 (Store Bal) for stored display with Erase Selector out. Operating level and store balance levels must match.

Collimation: Adjust R390 (CE1) for full screen coverage and best uniform brightness over the storage target area.

Non-Store: Adjust R395 (Non-Store) so screen erases promptly and completely when changing from store to non-store mode.

Writing Speed: Check that writing speed is ⩾20 divisions/millisecond for the D11, ⩾200 divisions/millisecond for the D15.

4. Check/Adjust CRT Deflection System Page 4-6

Horizontal Centering/Sweep Magnification: Adjust R675 to establish horizontal electrical zero at the screen center.

Vertical and Horizontal Amplifier Gain: Adjust R116 and R136 to provide calibrated deflection factor. Adjust R385 in Store mode.

X-Y Phasing: Check that phase difference between identical amplifier units is 1° or less. Adjust C115.

5. Check Z Axis Amplifier Page 4-7

External Intensity Input: +5 V turns the CRT on from an off level; –5 V turns CRT off from an on level.

Beam Finder: Trace can be located.

6. Check Calibrator Loop Page 4-8

Amplitude and Frequency: Output amplitude is 400 mV; frequency is twice the power-line frequency.

CALIBRATION PROCEDURE

Preparation

NOTE

This instrument should be adjusted at an ambient temperature between +20°C and +30°C (between +68°F and +86°F) for best overall accuracy.

1. The D11/D15 is operated with a 5100-series Power Supply/Amplifier unit, forming an oscilloscope mainframe. Remove the right side and bottom cabinet panels.

2. Insert an amplifier plug-in unit in each vertical plug-in compartment (left and center). Insert a time-base plug-in unit in the horizontal (right) compartment.

3. Connect the oscilloscope to the power source for which it is wired.

4. Set the controls as given under Initial Control Settings. Refer to Fig. 4-1 for location of internal adjustments and test points.

5. Allow a 20 minute warm up time before performing the calibration procedure.

Initial Control Settings

NOTE

Do not preset internal controls unless they are known to be significantly out of adjustment, or unless repairs have been made in the circuit. In these instances, the particular controls can be set to midrange.

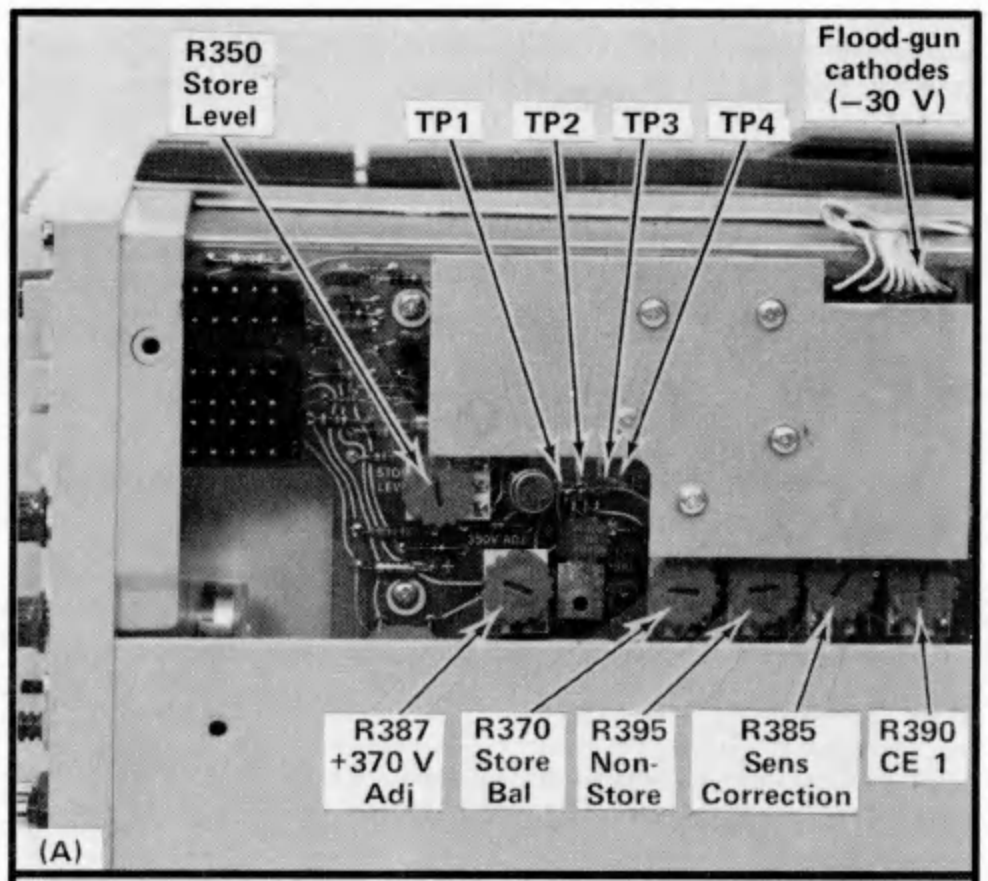

Fig. 4-1. Location of controls and test points.

D11/D15

INTENSITY	Counterclockwise
FOCUS	Midrange
POWER	ON
STORE (UPPER and LOWER)	Non-Store (buttons out)
BRIGHTNESS (Y-T)	Clockwise
ENHANCE	Counterclockwise

Amplifier Units (both)

Display	On
Position	Midrange
Volts/Div	50 mV
Variable	Calibrated (fully clockwise)
Input Coupling	DC, GND

Time Base Unit

Display	Alt (button out
Position	Sweep starts at the left edge of the graticule
Seconds/Div	0.5 ms
Variable	Calibrated (fully clockwise)
Swp Mag	Off (button out)
Triggering Mode	Auto Trig, AC Coupling, + Slope
Triggering Source	Display (Left and Right buttons in)
Triggering Level	Midrange

1. Check/Adjust Power Supplies

LOW-VOLTAGE SUPPLIES

a. Connect the DC voltmeter between each low-voltage test point and ground. See Fig. 4-1 for test point locations.

b. CHECK—Each supply is within the tolerance listed in Table 4-1.

NOTE

The tolerances in Table 4-1 include the possible 3% measurement error of the VOM. If a supply is outside the listed tolerance, refer to the Calibration section of the 5100-series Oscilloscope System manual for complete calibration instructions.

TABLE 4-1

Supply	Tolerance
−30 V	−29.025 V to −30.975 V
+5 V	+4.75 V to +5.25 V
+30 V	+28.95 V to +31.07 V
+205 V	+175 V to +247.5 V

HIGH VOLTAGE SUPPLY

CAUTION

Turn off instrument power when connecting and disconnecting the DC voltmeter.

c. Connect the DC voltmeter (20 kΩ/volt VOM set to measure at least –3500 volts) between ground and the –3400-volt test point.

d. CHECK–Meter reading must be –3400 volts, ±170 volts.

Adjust–R275, HV Adj, for –3400 volts.

e. Disconnect the DC voltmeter.

2. Check/Adjust CRT Operation

If you are beginning calibration with this step, set the front-panel controls as listed under Initial Control Settings except as follows:

Right Vertical Plug-in Display	Off (button out)

INTENSITY RANGE

a. Advance the INTENSITY control clockwise and check that a trace can be obtained, then turn the control fully counterclockwise.

b. ADJUST–Obtain a faint trace by adjusting R245, Intensity Range. Slowly turn the front-panel INTENSITY control clockwise until the trace starts to brighten, then adjust it 30° clockwise (one division marked on the panel) past this point. Make final adjustment of R245 by rotating it until the trace just disappears. The INTENSITY control can then be adjusted for normal display brightness.

ASTIGMATISM

c. Connect the low-frequency sine-wave generator to the left vertical plug-in unit input connector through a coaxial cable. Set the sine-wave generator for a 2-kilohertz, minimum amplitude output.

d. Set the input coupling switch of the left vertical unit to DC and adjust the sine-wave generator for about 6 divisions of display amplitude. Adjust the time-base triggering controls for a stable display.

e. ADJUST–R286, Astig, and front-panel FOCUS control for best focus of overall display.

f. Disconnect the sine-wave signal from the vertical input connector.

TRACE ALIGNMENT

g. Move the trace to the center of the graticule (left plug-in unit Position control).

h. CHECK–Trace should be parallel to the center graticule line.

ADJUST–TRACE ROTATION control (rear-panel screwdriver adjustment) to align the trace horizontally.

GEOMETRY

i. Press in the Display On button of the right vertical plug-in unit to obtain a two-trace display. Position one of the traces to the top of the graticule and the other trace to the bottom.

j. CHECK–Bowing of the traces must not exceed 0.1 division.

ADJUST–R285, Geom, for minimum curvature of the two traces.

k. Interchange the time-base plug-in unit with either of the amplifier plug-in units to obtain a vertical sweep. Position the vertical trace to the right edge of the graticule. Readjust R285 if the bowing exceeds 0.1 division.

l. Replace the time-base plug-in unit in the horizontal compartment and the amplifier unit in the vertical compartment. Recheck horizontal geometry.

3. Check/Adjust Storage Operation

If you are beginning calibration with this step, set the front-panel controls as listed under Initial Control Settings, except as follows:

STORE (both UPPER and LOWER)	In
Erase Select (both UPPER and LOWER)	In

+370-VOLT SUPPLY

a. Connect the DC voltmeter (20 kΩ/volt VOM set to measure at least +400 volts) between ground and the +370-volt test point (TP2).

b. CHECK—Meter reading must be +370 volts, ±7 volts.

ADJUST—R387, +370 V Adj, for +370 volts.

OPERATING LEVEL

c. Connect the DC voltmeter between the flood-gun cathodes (pin 3 of P389) and the Store Level test Point (TP1). Record the voltmeter reading so that if necessary you can return the operating level to the original setting.

NOTE

If CRT performance has been satisfactory, no adjustment of the Store Level control is necessary. Proceed to the Store Balance adjustment.

For replacement CRT's, an information card is provided to show the optimum levels established by the factory for the individual CRT. All voltage levels associated with storage operation are made with respect to the flood-gun cathodes.

d. Locate the Writing Threshold (minimum store level) as follows:

1. Turn the INTENSITY control clockwise until the trace starts to defocus rapidly. Press the ERASE button to prepare the target area for storage.

2. Write about 3 lines per division across both targets by slewing the free-running trace vertically with the vertical position control

3. Carefully check the written lines for breaks or gaps of 0.025 inch or more. If no breaks or gaps are evident after 10 seconds, adjust R350, Store Level, to reduce the operating level by 5 volts.

4. Erase twice, wait 10 seconds, then write again and check for breaks or gaps.

5. Repeat this procedure of decreasing the operating voltage level in 5-volt steps until breaks of about 0.025 inch occur. This is the Writing Threshold. Note the voltage and rotate the Store Level control clockwise until the original level noted in step c is reached.

NOTE

Do not change the INTENSITY or FOCUS control settings.

e. Locate the Upper Writing Limit (maximum store level) as follows:

1. Again write about 3 lines per division. Carefully check the stored lines and background for trace spreading or background fade-up. If no trace spreading or background fade-up is evident after 10 seconds, adjust R350, Store Level, to increase the operating level by 5 volts.

2. Erase twice, wait 10 seconds, then write again and check for spreading or fade-up.

3. Repeat this procedure until trace spreading of about 0.025 inch, or background fade-up occurs. This is the Upper Writing Limit. Note this voltage.

f. Adjust R350 for an operating point midway between the Upper Writing Limit and the Writing Threshold.

g. INTERACTION—Collimation and gain are affected if the change in operating level is significant.

STORE BALANCE

h. Move the positive lead of the DC voltmeter from TP1 to the store balance test point (TP4).

i. ADJUST—R370, Store Bal, to set the store level to the same voltage as that recorded at TP1.

COLLIMATION

j. Move the positive lead of the DC voltmeter from TP4 to the CE1 test point (TP3).

k. Write the entire screen by slowly positioning the trace vertically. If the screen fails to write, adjust the INTENSITY control slightly clockwise and repeat the process until the screen is fully written. Then turn the INTENSITY control fully counterclockwise.

l. Record the voltmeter reading before an adjustment is made so that if necessary you can return the collimation voltage to its original setting.

m. With the screen fully written, turn R390, CE1, fully counterclockwise noting that the screen edges are brightened and pulled. Slowly turn R390 clockwise to the point where the bright area just covers the graticule area.

n. Erase the screen and disconnect the DC voltmeter.

o. INTERACTION–Storage capabilities and display geometry should be rechecked if a significant change was made in the collimation voltage.

NON-STORE

p. Fully write the entire screen by slowly positioning the trace vertically.

q. ADJUST–Adjust R395, Non-Store, so background glow quickly (less than 1 second) disappears when the screen is placed in the non-store mode (STORE buttons out). Repeat the step as necessary to achieve correct adjustment of R395.

WRITING SPEED

r. Slowly advance the INTENSITY to the point where the trace begins to defocus rapidly.

s. Connect the sine-wave generator output to the left vertical unit input connector through a coaxial cable. Set the input coupling to DC and adjust the sine-wave generator for exactly 3.2 divisions of display amplitude at a frequency of about 1.5 kilohertz.

t. Set the time-base Sweep Mode to Single Sweep and erase the stored display. Alternately store and erase single sweeps while increasing the sine-wave generator frequency in small increments. Allow about five seconds after each erasure before writing another display. Adjust the frequency to the highest rate that will permit the vertical transitions of the sine-wave display to store anywhere on the center 6 X 8 division area of the screens, with no more than a 50% loss in luminance, or with the breaks in the trace not exceeding 0.025 inch. This is the maximum writing speed of the CRT.

Maximum writing speed is calculated as follows:

$$\text{Writing Speed (in divisions/second} = \frac{2\pi \text{ F } V_{p\text{-}p}}{2})$$

Substituting the display amplitude of 3.2 divisions for $V_{p\text{-}p}$, the expression is reduced to

Writing Speed $\approx$10 X F.

Thus, for example, if the sine-wave generator frequency is two kilohertz or greater, the maximum writing speed of the CRT is 20 divisions/millisecond (20,000 divisions/second) or greater.

u. CHECK–Writing speed is $\geqslant$20 divisions/millisecond for the D11, $\geqslant$200 divisions/millisecond for the D15.

NOTE

It may be necessary to repeat this step with a slightly higher trace intensity or store level.

v. Set the Sweep Mode to normal sweep, STORE switches to non-store, and remove the sine-wave generator.

4. Check/Adjust CRT Deflection System

If you are beginning calibration with this step, set the front-panel controls as listed under Initial Control Settings except as follows:

INTENSITY	Adjust for normal viewing brightness.
Input Coupling (both vertical plug-ins)	DC

HORIZONTAL CENTERING/SWEEP MAGNIFIER REGISTRATION

a. Set the standard amplitude calibrator for a 0.2-volt square wave and connect its output to the input connector of the left vertical plug-in unit through a coaxial cable. Position the rising edge of one of the square waves to the graticule center vertical line and push in the Swp Mag button on the time-base unit.

b. CHECK–The corresponding rising edge of the magnified sweep must be within two divisions of the graticule center.

ADJUST–While switching between magnified and unmagnified displays, alternately adjust R675, Horiz Cent (see Fig. 5-1 in the 5103N Oscilloscope System manual for

location), and the horizontal Position control until the rising edge of both the unmagnified and magnified displays is at the graticule center.

VERTICAL AND HORIZONTAL AMPLIFIER GAIN

c. Temporarily disconnect the calibrator signal and remove the time-base unit from the oscilloscope mainframe. Move one of the amplifier units to the horizontal compartment then reconnect the 0.2-volt calibrator signal through a dual-input cable to the input connectors of both amplifier units.

NOTE

Use two amplifier plug-ins known to be accurately calibrated, or verify their correct calibration by applying a known signal and measuring the differential output at pins A7 and B7 of the plug-in connector. The deflection factor at the output is 50 millivolts/division.

d. Set the input coupling of the amplifier unit in the horizontal compartment to DC. The display should be two dots joined by a diagonal line. The dots represent opposite corners of a square having sides 4 divisions in length. Adjust the Position controls to center the display.

e. CHECK—Vertical and horizontal deflection is 4 divisions, ±0.04 division.

ADJUST—R116, Vert Gain, and R136, Horiz Gain, so the vertical and horizontal deflection are each exactly 4 divisions.

f. Push in both STORE buttons and erase the screens.

g. CHECK—Vertical and horizontal deflection does not change when switching between store and non-store modes.

ADJUST—R385, Sensitivity Correction, so the deflection sensitivity is the same for the store mode as it is for the non-store mode.

h. Set both STORE switches to non-store (buttons out).

X-Y PHASING

i. Set the low-frequency sine-wave generator for a 100-kilohertz, minimum amplitude output. Move the coaxial cable from the standard amplitude calibrator output to the sine-wave generator output to apply the sine-wave signal to the amplifier plug-in units.

j. Adjust the vertical and horizontal Position controls to center the diagonal display, then increase the sine-wave generator amplitude until the display is 6 divisions vertically and horizontally.

k. CHECK—The opening of the loop measured on the graticule center iine is 0.07 division or less. This indicates a phase difference of 1° or less between the vertical and horizontal deflection system.

ADJUST—C115, Phase, for minimum loop opening (a straight line) in the diagonal display.

l. Remove the low-frequency sine-wave generator. Move the amplifier unit back to the vertical compartment and re-install the time-base unit.

BANDWIDTH

The requirement of the deflection amplifiers with respect to bandwidth is that the response is sufficient to pass a signal from any 5A-series plug-in unit. To verify system bandwidth, refer to the calibration sections of the individual plug-in unit manuals.

5. Check Z Axis Amplifier

Set the front-panel controls as listed under Initial Control Settings except as follows:

INTENSITY	Adjust for normal brightness

EXTERNAL INTENSITY INPUT

a. Turn the INTENSITY control until the traces cannot be seen, but not fully counterclockwise.

b. Connect the standard amplitude calibrator output to the EXT INTENSITY INPUT connector. Set the standard amplitude calibrator for a +5-volt DC output.

c. CHECK—Traces of normal brightness are displayed.

d. Disconnect the calibrator signal and adjust the INTENSITY control for traces of normal brightness. Set the standard amplitude calibrator for a —5-volt DC output and reconnect the cable to the EXT INTENSITY INPUT connector.

e. CHECK–The traces are not visible.

f. Remove the standard amplitude calibrator.

BEAM FINDER

g. Press the BEAM FINDER button and observe that the traces brighten slightly and compress into the graticule area.

h. CHECK–While holding the BEAM FINDER button in, neither trace can be positioned off screen.

i. Reposition the traces as desired and release the BEAM FINDER.

6. Check Calibrator Loop

Set the front-panel controls as listed under Initial Control Settings, except as follows:

INTENSITY	Adjust for normal brightness
Left Vertical Plug-in	
Volts/Div	.1
Input Coupling	DC
Right Vertical Plug-in	
Display	Off

a. Connect the front-panel CALIBRATOR loop to the left vertical plug-in unit input connector using a test lead. Adjust the time-base unit to trigger on the calibrator signal and set the Seconds/Div switch to display a few cycles of the waveform.

b. CHECK–Display amplitude is 4 divisions, ±0.04 division (400 millivolts). Frequency of the calibrator signal is twice the power-line frequency, which can be determined by measuring the length of time for two cycles of display and taking the reciprocal.

c. Disconnect all test equipment.

This completes the calibration procedure for the D11/D15.

REPLACEABLE ELECTRICAL PARTS

PARTS ORDERING INFORMATION

Replacement parts are available from or through your local Tektronix, Inc. Field Office or representative.

Changes to Tektronix instruments are sometimes made to accommodate improved components as they become available, and to give you the benefit of the latest circuit improvements developed in our engineering department. It is therefore important, when ordering parts, to include the following information in your order: Part number, instrument type or number, serial number, and modification number if applicable.

If a part you have ordered has been replaced with a new or improved part, your local Tektronix, Inc. Field Office or representative will contact you concerning any change in part number.

Change information, if any, is located at the rear of this manual.

SPECIAL NOTES AND SYMBOLS

X000	Part first added at this serial number
00X	Part removed after this serial number

ITEM NAME

In the Parts List, an Item Name is separated from the description by a colon (:). Because of space limitations, an Item Name may sometimes appear as incomplete. For further Item Name identification, the U.S. Federal Cataloging Handbook H6-1 can be utilized where possible.

ABBREVIATIONS

ACTR	ACTUATOR	PLSTC	PLASTIC
ASSY	ASSEMBLY	QTZ	QUARTZ
CAP	CAPACITOR	RECP	RECEPTACLE
CER	CERAMIC	RES	RESISTOR
CKT	CIRCUIT	RF	RADIO FREQUENCY
COMP	COMPOSITION	SEL	SELECTED
CONN	CONNECTOR	SEMICOND	SEMICONDUCTOR
ELCTLT	ELECTROLYTIC	SENS	SENSITIVE
ELEC	ELECTRICAL	VAR	VARIABLE
INCAND	INCANDESCENT	WW	WIREWOUND
LED	LIGHT EMITTING DIODE	XFMR	TRANSFORMER
NONWIR	NON WIREWOUND	XTAL	CRYSTAL

CROSS INDEX MFR. CODE NUMBER TO MANUFACTURER

MFR.CODE	MANUFACTURER	ADDRESS	CITY,STATE,ZIP
00853	SANGAMO ELECTRIC CO., S. CAROLINA DIV.	P. O. BOX 128	PICKENS, SC 29671
01121	ALLEN-BRADLEY CO.	1201 2ND ST. SOUTH	MILWAUKEE, WI 53204
01295	TEXAS INSTRUMENTS, INC., SEMICONDUCTOR GROUP	P. O. BOX 5012	DALLAS, TX 75222
03508	GENERAL ELECTRIC CO., SEMI-CONDUCTOR PRODUCTS DEPT.	ELECTRONICS PARK	SYRACUSE, NY 13201
04713	MOTOROLA, INC., SEMICONDUCTOR PRODUCTS DIV.	5005 E. MCDOWELL RD.	PHOENIX, AZ 85036
07263	FAIRCHILD SEMICONDUCTOR, A DIV. OF FAIRCHILD CAMERA AND INSTRUMENT CORP.	464 ELLIS ST.	MOUNTAIN VIEW, CA 94042
07910	TELEDYNE SEMICONDUCTOR	12515 CHADRON AVE.	HAWTHORNE, CA 90250
08806	GENERAL ELECTRIC CO., MINIATURE LAMP PRODUCTS DEPT.	NELA PK.	CLEVELAND, OH 44112
10582	CTS OF ASHEVILLE, INC.	MILLS GAP ROAD	SKYLAND, NC 28776
11236	CTS OF BERNE, INC.	406 PARR RD.	BERNE, IN 46711
12697	CLAROSTAT MFG. CO., INC.	LOWER WASHINGTON ST.	DOVER, NH 03820
16758	DELCO ELECTRONICS, DIV. OF GENERAL MOTORS CORP.	700 E. FIRMIN ST.	KOKOMO, IN 46901
24931	SPECIALTY CONNECTOR CO., INC.	3560 MADISON AVE.	INDIANAPOLIS, IN 46227
56289	SPRAGUE ELECTRIC CO.		NORTH ADAMS, MA 01247
71400	BUSSMAN MFG., DIVISION OF MCGRAW-EDISON CO.	2536 W. UNIVERSITY ST.	ST. LOUIS, MO 63107
71450	CTS CORP.	1142 W. BEARDSLEY AVE.	ELKHART, IN 46514
71590	CENTRALAB ELECTRONICS, DIV. OF GLOBE-UNION, INC.	5757 N. GREEN BAY AVE.	MILWAUKEE, WI 53201
72136	ELECTRO MOTIVE CORP., SUB OF INTERNATIONAL ELECTRONICS CORP.	SOUTH PARK AND JOHN STREETS	WILLIMANTIC, CT 06226
72982	ERIE TECHNOLOGICAL PRODUCTS, INC.	644 W. 12TH ST.	ERIE, PA 16512
73138	BECKMAN INSTRUMENTS, INC., HELIPOT DIV.	2500 HARBOR BLVD.	FULLERTON, CA 92634
75042	TRW ELECTRONIC COMPONENTS, IRC FIXED RESISTORS, PHILADELPHIA DIVISION	401 N. BROAD ST.	PHILADELPHIA, PA 19108
80009	TEKTRONIX, INC.	P. O. BOX 500	BEAVERTON, OR 97005
81073	GRAYHILL, INC.	561 HILLGROVE AVE., P O BOX 373	LA GRANGE, IL 60525
81439	THERM-O-DISC, INC.	1320 S MAIN ST., P O BOX 1538	MANSFIELD, OH 44907
81483	INTERNATIONAL RECTIFIER CORP.	9220 SUNSET BLVD.	LOS ANGELES, CA 90069
83003	VARO, INC.	P O BOX 411, 2203 WALNUT ST.	GARLAND, TX 75040
91637	DALE ELECTRONICS, INC.	P. O. BOX 609	COLUMBUS, NB 68601
91929	HONEYWELL, INC., MICRO SWITCH DIV.	CHICAGO & SPRING STS.	FREEPORT, IL 61032

Ckt No.	Tektronix Part No.	Serial/Model No. Eff	Dscont	Name & Description	Mfr Code	Mfr Part Number
A1[1]	670-1621-00	B010100	B029999	CKT BOARD ASSY:HIGH VOLTAGE	80009	670-1621-00
A1[1]	670-1621-01	B030000	B049999	CKT BOARD ASSY:HIGH VOLTAGE	80009	670-1621-01
A1[1]	670-1621-02	B050000		CKT BOARD ASSY:HIGH VOLTAGE	80009	670-1621-02
A1[2]	670-1621-02			CKT BOARD ASSY:HIGH VOLTAGE	80009	670-1621-02
A2	670-1454-00			CKT BOARD ASSY:AUXILIARY	80009	670-1454-00
A3[1]	670-1434-00			CKT BOARD ASSY:STORAGE	80009	670-1434-00
A3[2]	670-1434-01			CKT BOARD ASSY:STORAGE	80009	670-1434-01
A106[1]	283-0684-00	B010100	B049999	CAP.,FXD,MICA D:620PF,2%,300V	00853	D153E621GO
C106[1]	283-0596-00	B050000		CAP.,FXD,MICA D:528PF,1%,300V	00853	D153F5280F0
C106[2]	283-0596-00			CAP.,FXD,MICA D:528PF,1%,300V	00853	D153F5280F0
C115[1]	281-0027-00	B010100	B049999X	CAP.,VAR,PLSTC:0.7-3PF,350V	72982	535-017-4R
C116[1]	283-0598-00	B010100	B049999	CAP.,FXD,MICA D:253PF,5%,300V	00853	D153E2530J0
C116[1]	281-0180-00	B050000		CAP.,VAR,MICA D:18-115PF,175V	72136	T50607-2
C116[2]	281-0180-00			CAP.,VAR,MICA D:18-115PF,175V	72136	T50607-2
C126	283-0596-00			CAP.,FXD,MICA D:528PF,1%,300V	00853	D153F5280F0
C136	283-0672-00			CAP.,FXD,MICA D:200PF,1%,500V	00853	D155F201F0
C224	283-0065-00			CAP.,FXD,CER DI:0.001UF,5%,100V	72982	805-505B102J
C227	281-0537-00			CAP.,FXD,CER DI:0.68PF,20%,600V	80009	281-0537-00
C236	285-0526-00			CAP.,FXD,PLSTC:0.1UF,20%,600V	56289	410P10404
C241	283-0270-00			CAP.,FXD,CER DI:0.0068UF,+80-20%,4000V	56289	45C17
C242	283-0261-00			CAP.,FXD,CER DI:0.01UF,20%,4000V	56289	41C421
C248	283-0270-00			CAP.,FXD,CER DI:0.0068UF,+80-20%,4000V	56289	45C17
C249	283-0270-00			CAP.,FXD,CER DI:0.0068UF,+80-20%,4000V	56289	45C17
C251	290-0194-00			CAP.,FXD,ELCTLT:10UF,+50-10%,100V	56289	30D106F100DC4
C252	283-0617-00			CAP.,FXD,MICA D:4700PF,10%,300V	00853	D193F472K0
C253	283-0003-00			CAP.,FXD,CER DI:0.01UF,+80-20%,150V	72982	855-547E103Z
C254	283-0059-00			CAP.,FXD,CER DI:1UF,+80-20%,25V	72982	8141N038651105Z
C258	283-0059-00			CAP.,FXD,CER DI:1UF,+80-20%,25V	72982	8141N038651105Z
C259	283-0164-00			CAP.,FXD,CER DI:2.2UF,20%,25V	72982	8141N038651225M
C272	283-0021-00			CAP.,FXD,CER DI:0.001UF,20%,5000V	72982	828-005Y5S0102M
C273	283-0208-00			CAP.,FXD,CER DI:0.22UF,10%,200V	72982	8151N230W5R224K
C274[1]	283-0104-00	B010100	B039999	CAP.,FXD,CER DI:2000PF,5%,500V	72982	811-565B202J
C274[1]	283-0142-00	B040000		CAP.,FXD,CER DI:0.0027UF,(NOM VALUE),SEL	72982	875-551B272J
C274[2]	283-0142-00			CAP.,FXD,CER DI:0.0027UF,(NOM VALUE),SEL	72982	875-551B272J
C279	283-0065-00			CAP.,FXD,CER DI:0.001UF,5%,100V	72982	805-505B102J
C281	283-0003-00			CAP.,FXD,CER DI:0.01UF,+80-20%,150V	72982	855-547E103Z
C303	283-0067-00			CAP.,FXD,CER DI:0.001UF,10%,200V	72982	835-515B102K
C307	283-0067-00			CAP.,FXD,CER DI:0.001UF,10%,200V	72982	835-515B102K
C311	281-0500-00			CAP.,FXD,CER DI:2.2PF,+/-0.5PF,500V	72982	301-000C0J0229D
C321	281-0500-00			CAP.,FXD,CER DI:2.2PF,+/-0.5PF,500V	72982	301-000C0J0229D
C325	283-0026-00			CAP.,FXD,CER DI:0.2UF,+80-20%,25V	56289	274C3
C326[2]	283-0067-00			CAP.,FXD,CER DI:0.001UF,10%,200V	72982	835-515B102K
C327[2]	290-0264-00			CAP.,FXD,ELCTLT:0.22UF,10%,35V	56289	162D224X9035BC2
C330	290-0267-00			CAP.,FXD,ELCTLT:1UF,20%,35V	56289	162D105X0035CD2
C331	283-0003-00			CAP.,FXD,CER DI:0.01UF,+80-20%,150V	72982	855-547E103Z
C337	290-0188-00			CAP.,FXD,ELCTLT:0.1UF,10%,35V	56289	162D104X9035BC2
C342	290-0135-00			CAP.,FXD,ELCTLT:15UF,20%,20V	56289	150D156X0020B2
C385	290-0134-00			CAP.,FXD,ELCTLT:22UF,20%,15V	56289	150D226X0015B2
C386	285-0562-00			CAP.,FXD,PLSTC:0.47UF,20%,400V	56289	410P47404
C387	283-0067-00			CAP.,FXD,CER DI:0.001UF,10%,200V	72982	835-515B102K
C389	283-0013-00			CAP.,FXD,CER DI:0.01UF,+100-0%,1000V	56289	33C29A7
C391	283-0008-00			CAP.,FXD,CER DI:0.1UF,500V	72982	8151N501 E104M
C394	283-0057-00			CAP.,FXD,CER DI:0.1UF,+80-20%,200V	56289	274C10

[1]D11 only.
[2]D15 only.

Ckt No.	Tektronix Part No.	Serial/Model No. Eff	Dscont	Name & Description	Mfr Code	Mfr Part Number
C398	290-0267-00			CAP.,FXD,ELCTLT:1UF,20%,35V	56289	162D105X0035CD2
C399	290-0247-00			CAP.,FXD,ELCTLT:5.6UF,10%,6V	56289	162D565X9006CD2
C712	283-0000-00			CAP.,FXD,CER DI:0.001UF,+100-0%,500V	72982	831-516E102P
C714	281-0628-00			CAP.,FXD,CER DI:15PF,5%,600V	72982	301-000C0G0150J
C716	281-0628-00			CAP.,FXD,CER DI:15PF,5%,600V	72982	301-000C0G0150J
C721	281-0628-00			CAP.,FXD,CER DI:15PF,5%,600V	72982	301-000C0G0150J
CR209	152-0061-00			SEMICOND DEVICE:SILICON,175V,100MA	80009	152-0061-00
CR211	152-0061-00			SEMICOND DEVICE:SILICON,175V,100MA	80009	152-0061-00
CR214	152-0185-00			SEMICOND DEVICE:SILICON,40PIV,150MA	07910	1N4152
CR215	152-0061-00			SEMICOND DEVICE:SILICON,175V,100MA	80009	152-0061-00
CR224	152-0061-00			SEMICOND DEVICE:SILICON,175V,100MA	80009	152-0061-00
CR239	152-0061-00			SEMICOND DEVICE:SILICON,175V,100MA	80009	152-0061-00
CR241	152-0409-00			SEMICOND DEVICE:SILICON,12,000V,5MA	83003	VG-12X
CR247	152-0409-00			SEMICOND DEVICE:SILICON,12,000V,5MA	83003	VG-12X
CR253	152-0414-00			SEMICOND DEVICE:SILICON,200V,0.75A	80009	152-0414-00
CR255	152-0185-00			SEMICOND DEVICE:SILICON,40PIV,150MA	07910	1N4152
CR256	152-0061-00			SEMICOND DEVICE:SILICON,175V,100MA	80009	152-0061-00
CR262	152-0185-00			SEMICOND DEVICE:SILICON,40PIV,150MA	07910	1N4152
CR264	152-0185-00			SEMICOND DEVICE:SILICON,40PIV,150MA	07910	1N4152
CR269	152-0061-00			SEMICOND DEVICE:SILICON,175V,100MA	80009	152-0061-00
CR329	152-0488-00			SEMICOND DEVICE:SILICON,200V,1500MA	80009	152-0488-00
CR332	152-0185-00			SEMICOND DEVICE:SILICON,40PIV,150MA	07910	1N4152
CR343	152-0185-00			SEMICOND DEVICE:SILICON,40PIV,150MA	07910	1N4152
CR351	152-0185-00			SEMICOND DEVICE:SILICON,40PIV,150MA	07910	1N4152
CR358	152-0185-00			SEMICOND DEVICE:SILICON,40PIV,150MA	07910	1N4152
CR386	152-0331-00			SEMICOND DEVICE:SILICON,800V,25MA	80009	152-0331-00
CR392	152-0061-00			SEMICOND DEVICE:SILICON,175V,100MA	80009	152-0061-00
CR702	152-0185-00			SEMICOND DEVICE:SILICON,40PIV,150MA	07910	1N4152
CR704	152-0185-00			SEMICOND DEVICE:SILICON,40PIV,150MA	07910	1N4152
CR712	152-0185-00			SEMICOND DEVICE:SILICON,40PIV,150MA	07910	1N4152
CR714	152-0185-00			SEMICOND DEVICE:SILICON,40PIV,150MA	07910	1N4152
CR721	152-0185-00			SEMICOND DEVICE:SILICON,40PIV,150MA	07910	1N4152
CR722	152-0185-00			SEMICOND DEVICE:SILICON,40PIV,150MA	07910	1N4152
DS271	150-0030-00			LAMP,GLOW:	08806	A2B-T
DS272	150-0030-00			LAMP,GLOW:	08806	A2B-T
DS273	150-0030-00			LAMP,GLOW:	08806	A2B-T
F201	159-0019-00			FUSE,CARTRIDGE:3AG,1A,250V,SLOW BLOW	71400	MDL1
J210	131-0955-00			CONNECTOR,RCPT,:BNC,FEMALE	24931	28JR200-1
L259	108-0564-00			COIL,RF:75UH	80009	108-0564-00
L291	108-0644-00			COIL,TUBE DEFLE:TRACE ROTATOR	80009	108-0644-00
Q104 [1]	151-0279-00	B010100	B099999	TRANSISTOR:SILICON,NPN	80009	151-0279-00
Q104 [1]	151-0150-00	B100000		TRANSISTOR:SILICON,NPN	80009	151-0150-00
Q104 [2]	151-0279-00	B010100	B059999	TRANSISTOR:SILICON,NPN	80009	151-0279-00
Q104 [2]	151-0150-00	B060000		TRANSISTOR:SILICON,NPN	80009	151-0150-00
Q106 [1]	151-0190-02	B010100	B079999	TRANSISTOR:SILICON,NPN	04713	2N3904
Q106 [1]	151-0190-00	B080000		TRANSISTOR:SILICON,NPN	80009	151-0190-00
Q106 [2]	151-0190-02	B010100	B039999	TRANSISTOR:SILICON,NPN	04713	2N3904
Q106 [2]	151-0190-00	B040000		TRANSISTOR:SILICON,NPN	80009	151-0190-00
Q114 [1]	151-0279-00	B010100	B099999	TRANSISTOR:SILICON,NPN	80009	151-0279-00
Q114 [1]	151-0150-00	B100000		TRANSISTOR:SILICON,NPN	80009	151-0150-00

[1] D11 only.
[2] D15 only.

Ckt No.	Tektronix Part No.	Serial/Model No. Eff	Dscont	Name & Description	Mfr Code	Mfr Part Number
Q114 [1]	151-0279-00	B010100	B059999	TRANSISTOR:SILICON,NPN	80009	151-0279-00
Q114 [1]	151-0150-00	B060000		TRANSISTOR:SILICON,NPN	80009	151-0150-00
Q116 [2]	151-0190-02	B010100	B079999	TRANSISTOR:SILICON,NPN	04713	2N3904
Q116 [2]	151-0190-00	B080000		TRANSISTOR:SILICON,NPN	80009	151-0190-00
Q116 [1]	151-0190-02	B010100	B039999	TRANSISTOR:SILICON,NPN	04713	2N3904
Q116 [1]	151-0190-00	B040000		TRANSISTOR:SILICON,NPN	80009	151-0190-00
Q124 [2]	151-0279-00	B010100	B099999	TRANSISTOR:SILICON,NPN	80009	151-0279-00
Q124 [2]	151-0150-00	B100000		TRANSISTOR:SILICON,NPN	80009	151-0150-00
Q124 [1]	151-0279-00	B010100	B059999	TRANSISTOR:SILICON,NPN	80009	151-0279-00
Q124 [1]	151-0150-00	B060000		TRANSISTOR:SILICON,NPN	80009	151-0150-00
Q126 [2]	151-0190-02	B010100	B079999	TRANSISTOR:SILICON,NPN	04713	2N3904
Q126 [2]	151-0190-00	B080000		TRANSISTOR:SILICON,NPN	80009	151-0190-00
Q126 [1]	151-0190-02	B010100	B039999	TRANSISTOR:SILICON,NPN	04713	2N3904
Q126 [1]	151-0190-00	B040000		TRANSISTOR:SILICON,NPN	80009	151-0190-00
Q134 [2]	151-0279-00	B010100	B099999	TRANSISTOR:SILICON,NPN	80009	151-0279-00
Q134 [2]	151-0150-00	B100000		TRANSISTOR:SILICON,NPN	80009	151-0150-00
Q134 [1]	151-0279-00	B010100	B059999	TRANSISTOR:SILICON,NPN	80009	151-0279-00
Q134 [1]	151-0150-00	B060000		TRANSISTOR:SILICON,NPN	80009	151-0150-00
Q136 [2]	151-0190-02	B010100	B079999	TRANSISTOR:SILICON,NPN	04713	2N3904
Q136 [2]	151-0190-00	B080000		TRANSISTOR:SILICON,NPN	80009	151-0190-00
Q136 [1]	151-0190-02	B010100	B039999	TRANSISTOR:SILICON,NPN	04713	2N3904
Q136 [1]	151-0190-00	B040000		TRANSISTOR:SILICON,NPN	80009	151-0190-00
Q138 [2]	151-0341-00	XB050000		TRANSISTOR:SILICON,NPN	07263	2N3565
Q138 [2]	151-0341-00			TRANSISTOR:SILICON,NPN	07263	2N3565
Q214	151-0341-00			TRANSISTOR:SILICON,NPN	07263	2N3565
Q222	151-0190-00			TRANSISTOR:SILICON,NPN	80009	151-0190-00
Q226 [2]	151-0179-00	B010100	B069999	TRANSISTOR:SILICON,NPN	03508	X16X2069
Q226 [2]	151-0347-00	B070000		TRANSISTOR:SILICON,NPN	80009	151-0347-00
Q226 [1]	151-0179-00	B010100	B029999	TRANSISTOR:SILICON,NPN	03508	X16X2069
Q226 [1]	151-0347-00	B030000		TRANSISTOR:SILICON,NPN	80009	151-0347-00
Q234 [2]	151-0228-00	B010100	B069999	TRANSISTOR:SILICON,PNP,SEL FROM 2N4888	80009	151-0228-00
Q234 [2]	151-0350-00	B070000	B079999	TRANSISTOR:SILICON,PNP	07263	2N5401
Q234 [2]	151-0406-00	B080000		TRANSISTOR:SILICON,PNP	07263	S37880
Q234 [1]	151-0228-00	B010100	B029999	TRANSISTOR:SILICON,PNP,SEL FROM 2N4888	80009	151-0228-00
Q234 [1]	151-0350-00	B030000	B039999	TRANSISTOR:SILICON,PNP	07263	2N5401
Q234 [1]	151-0406-00	B040000		TRANSISTOR:SILICON,PNP	07263	S37880
Q252	151-0256-00			TRANSISTOR:SILICON,NPN	16758	7305762
Q262	151-0207-00			TRANSISTOR:SILICON,NPN	03508	GET3415
Q264	151-0342-00			TRANSISTOR:SILICON,PNP	07263	2N4249
Q278	151-1005-00			TRANSISTOR:SILICON,JFE,N-CHANNEL	80009	151-1005-00
Q302	151-0341-00			TRANSISTOR:SILICON,NPN	07263	2N3565
Q304	151-0188-00			TRANSISTOR:SILICON,PNP	01295	2N3906
Q308	151-0279-00			TRANSISTOR:SILICON,NPN	80009	151-0279-00
Q310	151-0188-00			TRANSISTOR:SILICON,PNP	01295	2N3906
Q320	151-0188-00			TRANSISTOR:SILICON,PNP	01295	2N3906
Q322 [1]	151-0342-00			TRANSISTOR:SILICON,PNP	07263	2N4249
Q328 [1]	151-0342-00			TRANSISTOR:SILICON,PNP	07263	2N4249
Q334	151-0341-00			TRANSISTOR:SILICON,NPN	07263	2N3565
Q336	151-0207-00			TRANSISTOR:SILICON,NPN	03508	GET3415
Q356	151-0341-00			TRANSISTOR:SILICON,NPN	07263	2N3565
Q358	151-0169-00			TRANSISTOR:SILICON,NPN	80009	151-0169-00
Q362	151-0279-00			TRANSISTOR:SILICON,NPN	80009	151-0279-00
Q364	151-0279-00			TRANSISTOR:SILICON,NPN	80009	151-0279-00

[1]D15 only.
[2]D11 only.

Ckt No.	Tektronix Part No.	Serial/Model No. Eff	Dscont	Name & Description	Mfr Code	Mfr Part Number
Q372	151-0279-00			TRANSISTOR:SILICON,NPN	80009	151-0279-00
Q384	151-0216-00			TRANSISTOR:SILICON,PNP	04713	MPS6523
Q386	151-0342-00			TRANSISTOR:SILICON,PNP	07263	2N4249
Q388	151-0331-00			TRANSISTOR:SILICON,NPN	80009	151-0331-00
Q392	151-0169-00			TRANSISTOR:SILICON,NPN	80009	151-0169-00
Q396	151-0279-00			TRANSISTOR:SILICON,NPN	80009	151-0279-00
Q701	151-0341-00			TRANSISTOR:SILICON,NPN	07263	2N3565
Q702	151-1005-00			TRANSISTOR:SILICON,JFE,N-CHANNEL	80009	151-1005-00
Q703	151-0341-00			TRANSISTOR:SILICON,NPN	07263	2N3565
Q704	151-1005-00			TRANSISTOR:SILICON,JFE,N-CHANNEL	80009	151-1005-00
Q711	151-0341-00			TRANSISTOR:SILICON,NPN	07263	2N3565
Q712	151-1005-00			TRANSISTOR:SILICON,JFE,N-CHANNEL	80009	151-1005-00
Q713	151-0341-00			TRANSISTOR:SILICON,NPN	07263	2N3565
Q714	151-1005-00			TRANSISTOR:SILICON,JFE,N-CHANNEL	80009	151-1005-00
Q721	151-0192-00			TRANSISTOR:SILICON,NPN,SEL FROM MPS6521	80009	151-0192-00
Q722	151-0192-00			TRANSISTOR:SILICON,NPN,SEL FROM MPS6521	80009	151-0192-00
R101	315-0101-00			RES.,FXD,CMPSN:100 OHM,5%,0.25W	01121	CB1015
R102[1]	316-0470-00	B010100	B029999	RES.,FXD,CMPSN:47 OHM,10%,0.25W	01121	CB4701
R102[1]	316-0221-00	B030000		RES.,FXD,CMPSN:220 OHM,10%,0.25W	01121	CB2211
R102[2]	316-0221-00			RES.,FXD,CMPSN:220 OHM,10%,0.25W	01121	CB2211
R103[1]	316-0390-00	XB030000		RES.,FXD,CMPSN:39 OHM,10%,0.25W	01121	CB3901
R103[2]	316-0390-00			RES.,FXD,CMPSN:39 OHM,10%,0.25W	01121	CB3901
R104	308-0668-00			RES.,FXD,WW:6.2K OHM,3%,7W	91637	RS7-862000H
R106	321-0128-00			RES.,FXD,FILM:210 OHM,1%,0.125W	75042	CEAT0-2100F
R108	308-0539-00			RES.,FXD,WW:12.5K OHM,0.5%,2W	91637	RS2B-B22500D
R112[1]	316-0470-00	B010100	B029999	RES.,FXD,CMPSN:47 OHM,10%,0.25W	01121	CB4701
R112[1]	316-0221-00	B030000		RES.,FXD,CMPSN:220 OHM,10%,0.25W	01121	CB2211
R112[2]	316-0221-00			RES.,FXD,CMPSN:220 OHM,10%,0.25W	01121	CB2211
R113[1]	316-0390-00	XB030000		RES.,FXD,CMPSN:39 OHM,10%,0.25W	01121	CB3901
R113[2]	316-0390-00			RES.,FXD,CMPSN:39 OHM,10%,0.25W	01121	CB3901
R114	308-0668-00			RES.,FXD,WW:6.2K OHM,3%,7W	91637	RS7-862000H
R115[1]	316-0470-00	XB030000	B049999X	RES.,FXD,CMPSN:47 OHM,10%,0.25W	01121	CB4701
R116	311-1132-00			RES.,VAR,NONWIR:100 OHM,30%,0.50W	73138	91D-R100
R118	308-0539-00			RES.,FXD,WW:12.5K OHM,0.5%,2W	91637	RS2B-B22500D
R122[1]	316-0470-00	B010100	B029999	RES.,FXD,CMPSN:47 OHM,10%,0.25W	01121	CB4701
R122[1]	316-0221-00	B030000		RES.,FXD,CMPSN:220 OHM,10%,0.25W	01121	CB2211
R122[2]	316-0221-00			RES.,FXD,CMPSN:220 OHM,10%,0.25W	01121	CB2211
R123[1]	316-0390-00	XB030000		RES.,FXD,CMPSN:39 OHM,10%,0.25W	01121	CB3901
R123[2]	316-0390-00			RES.,FXD,CMPSN:39 OHM,10%,0.25W	01121	CB3901
R124	308-0668-00			RES.,FXD,WW:6.2K OHM,3%,7W	91637	RS7-862000H
R125	303-0751-00			RES.,FXD,CMPSN:750 OHM,5%,1W	01121	GB7515
R126	321-0128-00			RES.,FXD,FILM:210 OHM,1%,0.125W	75042	CEAT0-2100F
R128	308-0539-00			RES.,FXD,WW:12.5K OHM,0.5%,2W	91637	RS2B-B22500D
R132[1]	316-0470-00	B010100	B029999	RES.,FXD,CMPSN:47 OHM,10%,0.25W	01121	CB4701
R132[1]	316-0221-00	B030000		RES.,FXD,CMPSN:220 OHM,10%,0.25W	01121	CB2211
R132[2]	316-0221-00			RES.,FXD,CMPSN:220 OHM,10%,0.25W	01121	CB2211
R133[1]	316-0390-00	XB030000		RES.,FXD,CMPSN:39 OHM,10%,0.25W	01121	CB3901
R133[2]	316-0390-00			RES.,FXD,CMPSN:39 OHM,10%,0.25W	01121	CB3901
R134	308-0668-00			RES.,FXD,WW:6.2K OHM,3%,7W	91637	RS7-862000H
R135[1]	316-0470-00	XB030000	B049999X	RES.,FXD,CMPSN:47 OHM,10%,0.25W	01121	CB4701
R135[1]	316-0390-00	XB100000		RES.,FXD,CMPSN:39 OHM,10%,0.25W	01121	CB3901
R135[2]	316-0390-00	XB060000		RES.,FXD,CMPSN:39 OHM,10%,0.25W	01121	CB3901

[1]D11 only.
[2]D15 only.

Ckt No.	Tektronix Part No.	Serial/Model No. Eff	Dscont	Name & Description	Mfr Code	Mfr Part Number
R136	311-1132-00			RES.,VAR,NONWIR:100 OHM,310%,0.50W	73138	91D-R100
R138	308-0539-00			RES.,FXD,WW:12.5K OHM,0.5%,2W	91637	RS2B-B22500D
R140[1]	316-0225-00	XB050000		RES.,FXD,CMPSN:2.2M OHM,10%,0.25W	01121	CB2251
R140[2]	316-0225-00			RES.,FXD,CMPSN:2.2M OHM,10%,0.25W	01121	CB2251
R200[1]	311-1160-00			RES.,VAR,NONWIR:100K OHM,20%,1W	12697	381CM-39689
R200A,B[2]	311-1331-00			RES.,VAR,NONWIR:100K OHM,20%,1W	11236	C2-551-BB30651
R202	315-0563-00			RES.,FXD,CMPSN:56K OHM,5%,0.25W	01121	CB5635
R203	316-0103-00			RES.,FXD,CMPSN:10K OHM,10%,0.25W	01121	CB1031
R206	315-0682-00			RES.,FXD,CMPSN:6.8K OHM,5%,0.25W	01121	CB6825
R207	316-0822-00			RES.,FXD,CMPSN:8.2K OHM,10%,0.25W	01121	CB8221
R208	316-0473-00			RES.,FXD,CMPSN:47K OHM,10%,0.25W	01121	CB4731
R209[1]	316-0224-00	XB050000		RES.,FXD,CMPSN:220K OHM,10%,0.25W	01121	CB2241
R209[2]	316-0224-00			RES.,FXD,CMPSN:220K OHM,10%,0.25W	01121	CB2241
R211	316-0103-00			RES.,FXD,CMPSN:10K OHM,10%,0.25W	01121	CB1031
R213	315-0623-00			RES.,FXD,CMPSN:62K OHM,5%,0.25W	01121	CB6235
R215	315-0103-00			RES.,FXD,CMPSN:10K OHM,5%,0.25W	01121	CB1035
R216	315-0153-00			RES.,FXD,CMPSN:15K OHM,5%,0.25W	01121	CB1535
R217	315-0103-00			RES.,FXD,CMPSN:10K OHM,5%,0.25W	01121	CB1035
R218	316-0183-00			RES.,FXD,CMPSN:18K OHM,10%,0.25W	01121	CB1831
R219	315-0683-00			RES.,FXD,CMPSN:68K OHM,5%,0.25W	01121	CB6835
R222	316-0102-00			RES.,FXD,CMPSN:1K OHM,10%,0.25W	01121	CB1021
R223	316-0472-00			RES.,FXD,CMPSN:4.7K OHM,10%,0.25W	01121	CB4721
R226[1]	316-0101-00	XB050000		RES.,FXD,CMPSN:100 OHM,10%,0.25W	01121	CB1011
R226[2]	316-0101-00			RES.,FXD,CMPSN:100 OHM,10%,0.25W	01121	CB1011
R227	321-0399-00			RES.,FXD,FILM:140K OHM,1%,0.125W	75042	CEAT0-1403F
R231	316-0472-00			RES.,FXD,CMPSN:4.7K OHM,10%,0.25W	01121	CB4721
R232	316-0274-00			RES.,FXD,CMPSN:270K OHM,10%,0.25W	01121	CB2741
R234	304-0223-00			RES.,FXD,CMPSN:22K OHM,10%,1W	01121	GB2231
R236	315-0101-00			RES.,FXD,CMPSN:100 OHM,5%,0.25W	01121	CB1015
R239	315-0101-00			RES.,FXD,CMPSN:100 OHM,5%,0.25W	01121	CB1015
R242	316-0223-00			RES.,FXD,CMPSN:22K OHM,10%,0.25W	01121	CB2231
R243	316-0105-00			RES.,FXD,CMPSN:1M OHM,10%,0.25W	01121	CB1051
R245[1]	311-1135-00	B010100	B029999	RES.,VAR,NONWIR:1M OHM,30%,0.25W	71450	201-YA5535
R245[1]	311-1205-00	B030000		RES.,VAR,NONWIR:2M OHM,30%,0.25W	71450	201-YA5545
R245[2]	311-1205-00			RES.,VAR,NONWIR:2M OHM,30%,0.25W	71450	201-YA5545
R248	316-0223-00			RES.,FXD,CMPSN:22K OHM,10%,0.25W	01121	CB2231
R251	307-0058-00			RES.,FXD,CMPSN:5.6 OHM,5%	01121	BB56G5
R252	308-0075-00			RES.,FXD,WW:100 OHM,5%,3W	91637	RS2B-B100ROJ
R254	308-0690-00			RES.,FXD,WW:3 OHM,10%,3W		
R262	302-0472-00			RES.,FXD,CMPSN:4.7K OHM,10%,050W	01121	EB4721
R263	316-0183-00			RES.,FXD,CMPSN:18K OHM,10%,0.25W	01121	CB1831
R266	315-0334-00			RES.,FXD,CMPSN:330K OHM,5%,0.25W	01121	CB3345
R267	315-0333-00			RES.,FXD,CMPSN:33K OHM,5%,0.25W	01121	CB3335
R268	315-0103-00			RES.,FXD,CMPSN:10K OHM,5%,0.25W	01121	CB1035
R269	315-0101-00			RES.,FXD,CMPSN:100 OHM,5%,0.25W	01121	CB1015
R270[1]	316-0223-00	XB060000		RES.,FXD,CMPSN:22K OHM,10%,0.25W	01121	CB2231
R270[2]	316-0223-00	XB020000		RES.,FXD,CMPSN:22K OHM,10%,0.25W	01121	CB2231
R271	316-0395-00			RES.,FXD,CMPSN:3.9M OHM,10%,0.25W	01121	CB3951
R272A-E	307-0296-00			RES.,FXD,FILM:	80009	307-0296-00
R273	315-0104-00			RES.,FXD,CMPSN:100K OHM,5%,0.25W	01121	CB1045
R274	315-0105-00			RES.,FXD,CMPSN:1M OHM,5%,0.25W	01121	CB1055
R275	311-1136-00			RES.,VAR,NONWIR:100K OHM,30%,0.25W	71450	201-YA5536
R276	315-0105-00			RES.,FXD,CMPSN:1M OHM,5%,0.25W	01121	CB1055

[1]D11 only.
[2]D15 only.

Ckt No.	Tektronix Part No.	Serial/Model No. Eff	Dscont	Name & Description	Mfr Code	Mfr Part Number
R278	316-0562-00			RES.,FXD,CMPSN:5.6K OHM,10%,0.25W	01121	CB5621
R279	315-0104-00			RES.,FXD,CMPSN:100K OHM,5%,0.25W	01121	CB1045
R282	315-0163-00			RES.,FXD,CMPSN:16K OHM,5%,0.25W	01121	CB1635
R285	311-1136-00			RES.,VAR,NONWIR:100K OHM,30%,0.25W	71450	201-YA5536
R286	311-1136-00			RES.,VAR,NONWIR:100K OHM,30%,0.25W	71450	201-YA5536
R287	301-0183-00			RES.,FXD,CMPSN:18K OHM,5%,0.50W	01121	EB1835
R291	311-1189-00			RES.,VAR,WW:5K OHM,20%,0.50W	10582	AW3349
R295	311-0254-00			RES.,VAR,NONWIR:5M OHM,10%,0.20W	12697	381-CM-29709
R302	316-0102-00			RES.,FXD,CMPSN:1K OHM,10%,0.25W	01121	CB1021
R303	315-0513-00			RES.,FXD,CMPSN:51K OHM,5%,0.25W	01121	CB5135
R304	316-0474-00			RES.,FXD,CMPSN:470K OHM,10%,0.25W	01121	CB4741
R305 [1]	316-0333-00			RES.,FXD,CMPSN:33K OHM,10%,0.25W	01121	CB3331
R307	315-0223-00			RES.,FXD,CMPSN:22K OHM,5%,0.25W	01121	CB2235
R308	315-0103-00			RES.,FXD,CMPSN:10K OHM,5%,0.25W	01121	CB1035
R310	315-0223-00			RES.,FXD,CMPSN:22K OHM,5%,0.25W	01121	CB2235
R311	315-0125-00			RES.,FXD,CMPSN:1.2M OHM,5%,0.25W	01121	CB1255
R312	315-0104-00			RES.,FXD,CMPSN:100K OHM,5%,0.25W	01121	CB1045
R313	315-0202-00			RES.,FXD,CMPSN:2K OHM,5%,0.25W	01121	CB2025
R314 [1]	316-0472-00			RES.,FXD,CMPSN:4.7K OHM,10%,0.25W	01121	CB4721
R316 [1]	315-0223-00			RES.,FXD,CMPSN:22K OHM,5%,0.25W	01121	CB2235
R317 [1]	316-0123-00			RES.,FXD,CMPSN:12K OHM,10%,0.25W	01121	CB1231
R318 [1]	315-0104-00			RES.,FXD,CMPSN:100K OHM,5%,0.25W	01121	CB1045
R321	315-0124-00			RES.,FXD,CMPSN:120K OHM,5%,0.25W	01121	CB1245
R322	315-0104-00			RES.,FXD,CMPSN:100K OHM,5%,0.25W	01121	CB1045
R324	315-0243-00			RES.,FXD,CMPSN:24K OHM,5%,0.25W	01121	CB2435
R325	311-1155-00			RES.,VAR,NONWIR:20K OHM,10%,0.50W	01121	W-7796
R326 [1]	315-0153-00			RES.,FXD,CMPSN:15K OHM,5%,0.25W	01121	CB1535
R327 [1]	315-0132-00			RES.,FXD,CMPSN:1.3K OHM,5%,0.25W	01121	CB1325
R328 [1]	315-0562-00			RES.,FXD,CMPSN:5.6K OHM,5%,0.25W	01121	CB5625
R329	315-0104-00			RES.,FXD,CMPSN:100K OHM,5%,0.25W	01121	CB1045
R330	316-0105-00			RES.,FXD,CMPSN:1M OHM,10%,0.25W	01121	CB1051
R331 [1]	315-0202-00	XB050000		RES.,FXD,CMPSN:2K OHM,5%,0.25W	01121	CB2025
R331 [2]	315-0202-00	XB090000		RES.,FXD,CMPSN:2K OHM,5%,0.25W	01121	CB2025
R332 [1]	315-0201-00	B010100	B049999	RES.,FXD,CMPSN:200 OHM,5%,0.25W	01121	CB2015
R332 [1]	315-0202-00	B050000		RES.,FXD,CMPSN:2K OHM,5%,0.25W	01121	CB2025
R332 [2]	315-0201-00	B010100	B089999	RES.,FXD,CMPSN:200 OHM,5%,0.25W	01121	CB2015
R332 [2]	315-0202-00	B090000		RES.,FXD,CMPSN:2K OHM,5%,0.25W	01121	CB2025
R334 [1]	316-0472-00	B010100	B049999	RES.,FXD,CMPSN:4.7K OHM,10%,0.25W	01121	CB4721
R334 [1]	315-0622-00	B050000		RES.,FXD,CMPSN:6.2K OHM,5%,0.25W	01121	CB6225
R334 [2]	316-0472-00	B010100	B089999	RES.,FXD,CMPSN:4.7K OHM,10%,0.25W	01121	CB4721
R334 [2]	315-0622-00	B090000		RES.,FXD,CMPSN:6.2K OHM,5%,0.25W	01121	CB6225
R336	315-0512-00			RES.,FXD,CMPSN:5.1K OHM,5%,0.25W	01121	CB5125
R337	315-0103-00			RES.,FXD,CMPSN:10K OHM,5%,0.25W	01121	CB1035
R339	315-0623-00			RES.,FXD,CMPSN:62K OHM,5%,0.25W	01121	CB6235
R341	315-0753-00			RES.,FXD,CMPSN:75K OHM,5%,0.25W	01121	CB7535
R342	316-0101-00			RES.,FXD,CMPSN:100 OHM,10%,0.25W	01121	CB1011
R343	316-0473-00			RES.,FXD,CMPSN:47K OHM,10%,0.25W	01121	CB4731
R346	315-0183-00			RES.,FXD,CMPSN:18K OHM,5%,0.25W	01121	CB1835
R347	321-0359-00			RES.,FXD,FILM:53.6K OHM,1%,0.125W	75042	CEAT0-5362F
R350	311-1153-00			RES.,VAR,NONWIR:5K OHM,30%,0.50W	73138	910-R5K
R351	315-0203-00			RES.,FXD,CMPSN:20K OHM,5%,0.25W	01121	CB2035
R352	315-0103-00			RES.,FXD,CMPSN:10K OHM,5%,0.25W	01121	CB1035
R354	315-0154-00			RES.,FXD,CMPSN:150K OHM,5%,0.25W	01121	CB1545

[1] D15 only.
[2] D11 only.

Ckt No.	Tektronix Part No.	Serial/Model No. Eff	Dscont	Name & Description	Mfr Code	Mfr Part Number
R355	323-0452-00			RES.,FXD,FILM:499K OHM,1%,0.50W	75042	CECT0-4993F
R364	303-0473-00			RES.,FXD,CMPSN:47K OHM,5%,1W	01121	GB4735
R365	303-0473-00			RES.,FXD,CMPSN:47K OHM,5%,1W	01121	GB4735
R370	311-1166-00			RES.,VAR,NONWIR:250K OHM,30%,0.50W		
R371	316-0393-00			RES.,FXD,CMPSN:39K OHM,10%,0.25W	01121	CB3931
R381	316-0334-00			RES.,FXD,CMPSN:330K OHM,10%,0.25W	01121	CB3341
R382	316-0334-00			RES.,FXD,CMPSN:330K OHM,10%,0.25W	01121	CB3341
R384	316-0123-00			RES.,FXD,CMPSN:12K OHM,10%,0.25W	01121	CB1231
R385	311-1153-00			RES.,VAR,NONWIR:5K OHM,30%,0.50W	73138	910-R5K
R386	315-0100-00			RES.,FXD,CMPSN:10 OHM,5%,0.25W	01121	CB1005
R387	311-1154-00			RES.,VAR,NONWIR:1K OHM,30%,0.50W	73138	910R1K
R388	321-0261-00			RES.,FXD,FILM:5.11K OHM,1%,0.125W	75042	CEAT0-5111F
R389	323-0436-00			RES.,FXD,FILM:340K OHM,1%,0.50W	75042	CECT0-3403F
R390	311-1166-00			RES.,VAR,NONWIR:250K OHM,30%,0.50W		
R392	301-0753-00			RES.,FXD,CMPSN:75K OHM,5%,0.50W	01121	EB7535
R395	311-1152-00			RES.,VAR,NONWIR:100K OHM,30%,0.50W	71590	SL1MTR1M-5
R396	315-0623-00			RES.,FXD,CMPSN:62K OHM,5%,0.25W	01121	CB6235
R397	316-0101-00			RES.,FXD,CMPSN:100 OHM,10%,0.25W	01121	CB1011
R701	316-0103-00			RES.,FXD,CMPSN:10K OHM,10%,0.25W	01121	CB1031
R702	316-0103-00			RES.,FXD,CMPSN:10K OHM,10%,0.25W	01121	CB1031
R703	316-0103-00			RES.,FXD,CMPSN:10K OHM,10%,0.25W	01121	CB1031
R704	316-0103-00			RES.,FXD,CMPSN:10K OHM,10%,0.25W	01121	CB1031
R706	316-0103-00			RES.,FXD,CMPSN:10K OHM,10%,0.25W	01121	CB1031
R707	316-0103-00			RES.,FXD,CMPSN:10K OHM,10%,0.25W	01121	CB1031
R709	316-0103-00			RES.,FXD,CMPSN:10K OHM,10%,0.25W	01121	CB1031
R710	316-0103-00			RES.,FXD,CMPSN:10K OHM,10%,0.25W	01121	CB1031
R712	316-0472-00			RES.,FXD,CMPSN:4.7K OHM,10%,0.25W	01121	CB4721
R713	316-0332-00			RES.,FXD,CMPSN:3.3K OHM,10%,0.25W	01121	CB3321
R715	321-0402-00			RES.,FXD,FILM:150K OHM,1%,0.125W	75042	CEAT0-1503F
R716	321-0356-00			RES.,FXD,FILM:49.9K OHM,1%,0.125W	75042	CEAT0-4992F
R717	321-0350-00			RES.,FXD,FILM:43.2K OHM,1%,0.125W	75042	CEAT0-4322F
R718	316-0153-00			RES.,FXD,CMPSN:15K OHM,5%,0.25W	01121	CB1535
R720	321-0385-00			RES.,FXD,FILM:100K OHM,1%,0.125W	75042	CEAT0-1003F
R721	321-0356-00			RES.,FXD,FILM:49.9K OHM,1%,0.125W	75042	CEAT0-4992F
R722	321-0365-00			RES.,FXD,FILM:61.9K OHM,1%,0.125W	75042	CEAT0-6192F
R723	316-0153-00			RES.,FXD,CMPSN:15K OHM,10%,0.25W	01121	CB1531
R724	316-0272-00			RES.,FXD,CMPSN:2.7K OHM,10%,0.25W	01121	CB2721
S125	260-1238-00			SWITCH,PUSH:0.5A AT 115VAC	81073	39-2
S200	260-0227-00			SW,THERMOSTATIC:	81439	SE11S6316
S201	260-1222-00			SWITCH,PUSH-PUL:10A,250VAC	91929	2DM301
S330	260-1223-00			SWITCH,PUSH:	80009	260-1223-00
S372A,B[1]	260-1232-00	B010100	B059999	SWITCH,PUSH:	80009	260-1232-00
S372A,B[1]	260-1232-01	B060000		SWITCH,PUSH:	80009	260-1232-01
S372A,B[2]	260-1232-00	B010100	B039999	SWITCH,PUSH:	80009	260-1232-00
S372A,B[2]	260-1232-01	B040000		SWITCH,PUSH:	80009	260-1232-01
S375A,B	260-1207-00			SWITCH,PUSH:2 MODULE	80009	260-1207-00
T240[1]	120-0705-01	B010100	B049999	XFMR,PWR,STU:	80009	120-0705-01
T240[1]	120-0761-00	B050000		XFMR,PWR,STU:	80009	120-0761-00
T240[2]	120-0761-00			XFMR,PWR,STU:	80009	120-0761-00
V291[1]	154-0634-01	B010100	B079999	ELECTRON TUBE:CRT	80009	154-0634-00
V291[1]	154-0634-10	B080000		ELECTRON TUBE:CRT	80009	154-0634-10
V291[2]	154-0634-02	B010100	B039999	ELECTRON TUBE:CRT	80009	154-0634-02
V291[2]	154-0634-12	B040000		ELECTRON TUBE:CRT	80009	154-0634-12

[1]D11 only.
[2]D15 only.

Ckt No.	Tektronix Part No.	Serial/Model No. Eff	Dscont	Name & Description	Mfr Code	Mfr Part Number
VR237	152-0283-00			SEMICOND DEVICE:ZENER,0.4W,43V,5%	04713	1N976B
VR258	152-0438-00			SEMICOND DEVICE:ZENER,3W,9.1V,5%		
VR281	152-0357-00			SEMICOND DEVICE:ZENER,0.4W,82V,5%	04713	1N983B
VR282	152-0255-00			SEMICOND DEVICE:ZENER,0.4W,51V,5%	04713	1N978B
VR370	152-0287-00			SEMICOND DEVICE:ZENER,0.4W,110V,5%	04713	1N986B
VR387	152-0283-00			SEMICOND DEVICE:ZENER,0.4W,43V,5%	04713	1N976B
VR388	152-0166-00			SEMICOND DEVICE:ZENER,0.4W,6.2V,5%	81483	69-9035
VR396	152-0288-00			SEMICOND DEVICE:ZENER,0.4W,140V,5%	04713	4-10M14025
VR720	152-0149-00			SEMICOND DEVICE:ZENER,0.4W,10V,5%	04713	1N961B

SECTION 6

DIAGRAMS AND CIRCUIT BOARD ILLUSTRATIONS

Symbols and Reference Designators

Electrical components shown on the diagrams are in the following units unless noted otherwise:

Capacitors = Values one or greater are in picofarads (pF).
Values less than one are in microfarads (μF).
Resistors = Ohms (Ω)

Symbols used on the diagrams are based on USA Standard Y32.2-1967.

Logic symbology is based on MIL-STD-806B in terms of positive logic. Logic symbols depict the logic function performed and may differ from the manufacturer's data.

The following special symbols are used on the diagrams:

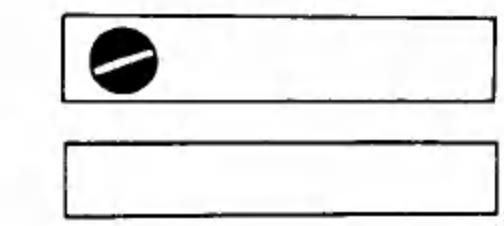

External Screwdriver adjustment.

External control or connector.

Clockwise control rotation in direction of arrow.

Refer to diagram number indicated in diamond.

Refer to waveform number indicated in hexagon.

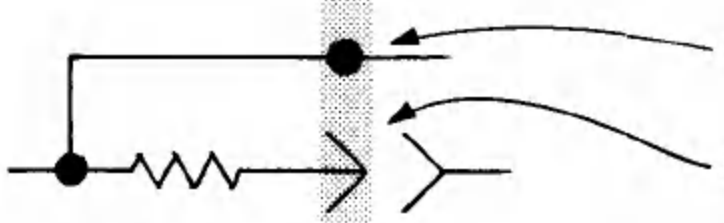

Connection soldered to circuit board.

Connection made to circuit board with interconnecting pin.

Blue tint encloses components located on circuit board.

P/O circuit board

The following prefix letters are used as reference designators to identify components or assemblies on the diagrams.

A Assembly, separable or repairable (circuit board, etc.)
AT Attenuator, fixed or variable
B Motor
BT Battery
C Capacitor, fixed or variable
CR Diode, signal or rectifier
DL Delay line
DS Indicating device (lamp)
F Fuse
FL Filter
H Heat dissipating device (heat sink, heat radiator, etc.)
HR Heater
J Connector, stationary portion
K Relay
L Inductor, fixed or variable
LR Inductor/resistor combination
M Meter
Q Transistor or silicon-controlled rectifier
P Connector, movable portion
R Resistor, fixed or variable
RT Thermistor
S Switch
T Transformer
TP Test point
U Assembly, inseparable or non-repairable (integrated circuit, etc.)
V Electron tube
VR Voltage regulator (zener diode, etc.)
Y Crystal

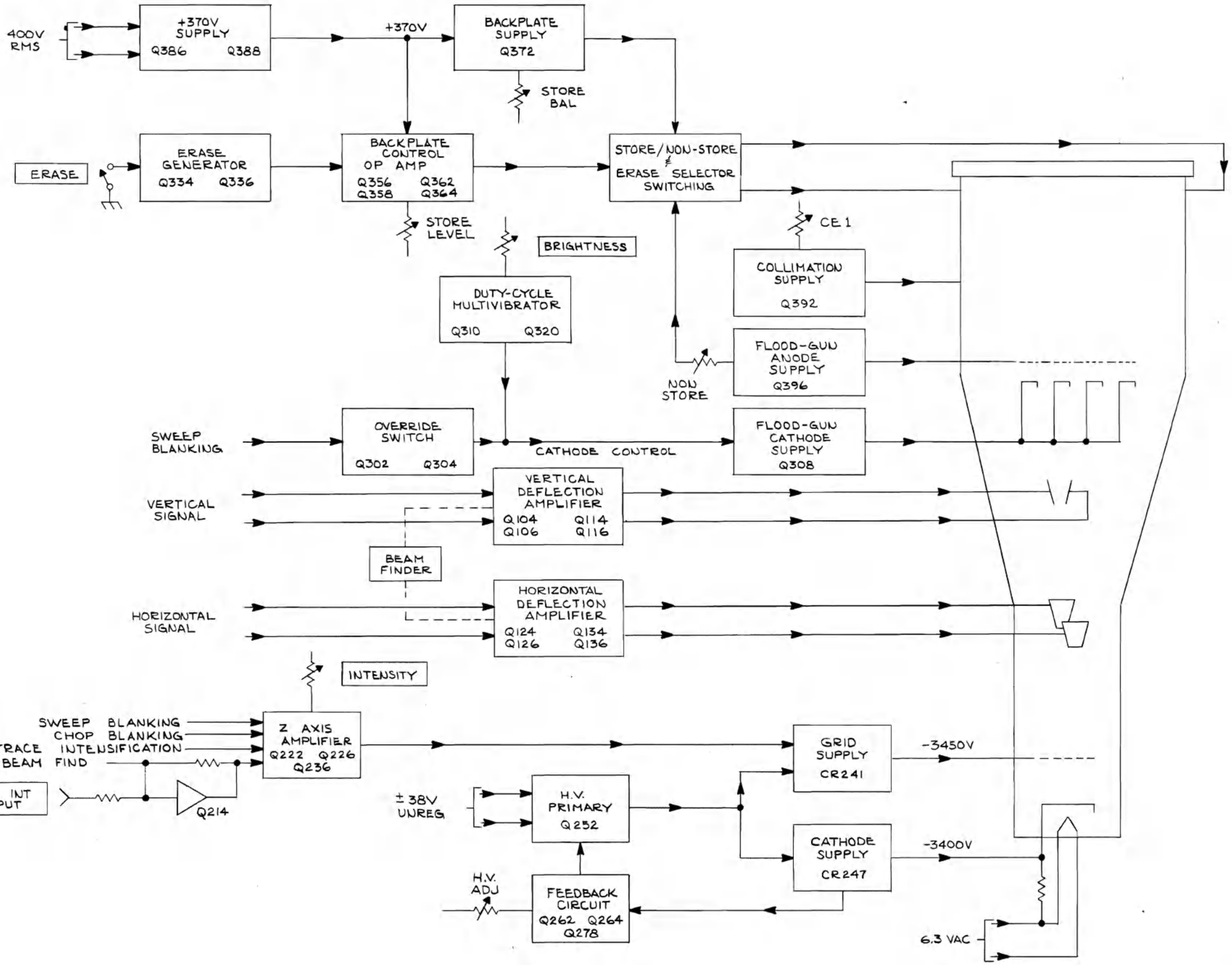

571
RHL

BLOCK DIAGRAM

D11/D15

Ⓐ

DEFLECTION AMPLIFIER/HIGH-VOLTAGE BOARD PARTS LOCATION GRID

Above SN B050000

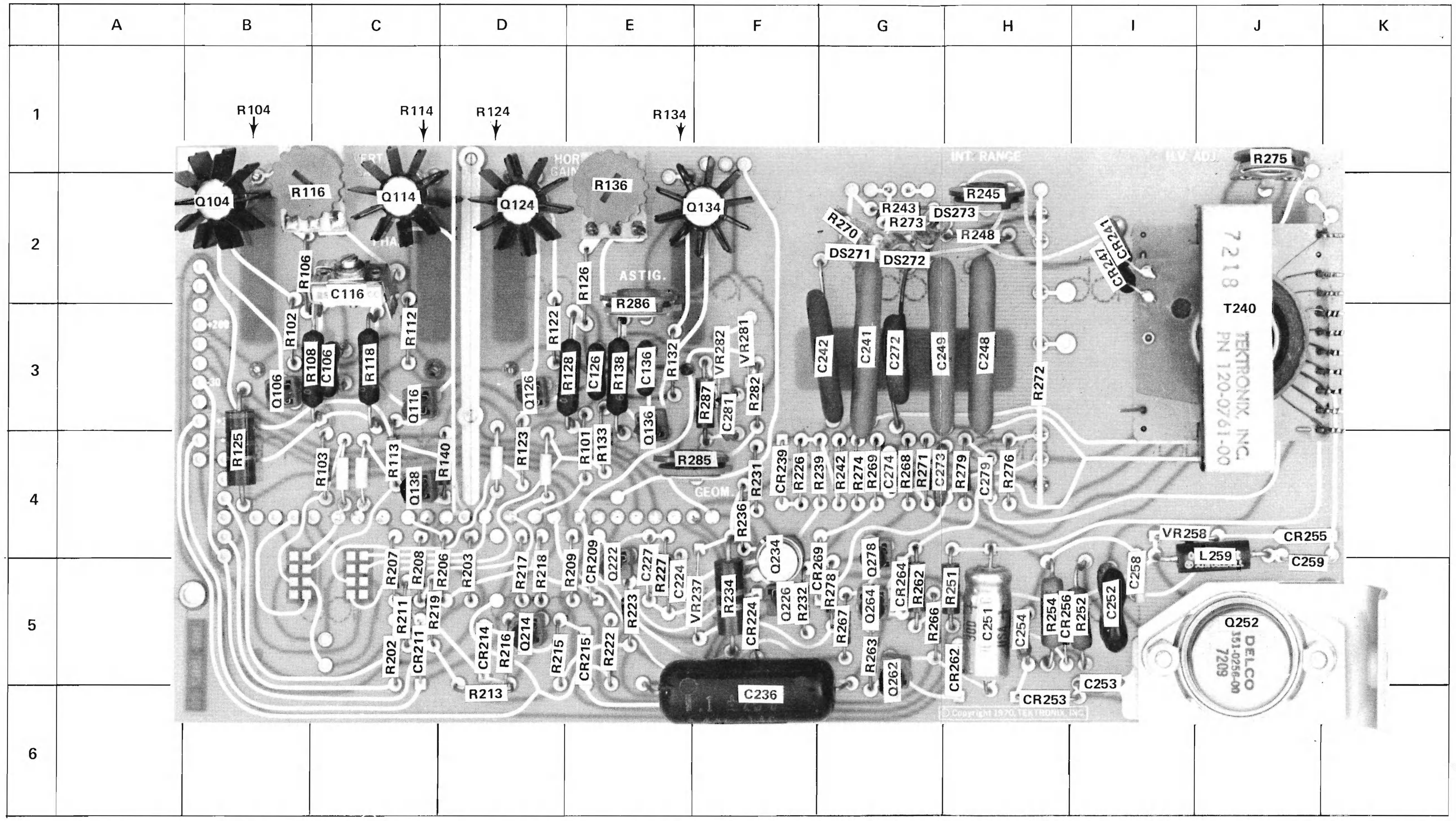

CKT NO	GRID LOC	CKT NO	GRID LOC	CKT NO	GRID LOC	CKT NO	GRID LOC	CKT NO	GRID LOC	CKT NO	GRID LOC	CKT NO	GRID LOC	CKT NO	GRID LOC	CKT NO	GRID LOC	CKT NO	GRID LOC	CKT NO	GRID LOC	CKT NO	GRID LOC	CKT NO	GRID LOC
C106	C-3	C252	I-5	CR209	E-5	CR269	F-4	DS271	G-2	Q104	B-2	Q234	F-4	R101	E-4	R124	D-1	R206	E-5	R223	E-5	R251	G-5	R274	G-4
C116	C-2	C253	I-5	CR211	C-5			DS272	G-2	Q106	B-3	Q252	J-5	R102	B-3	R125	B-4	R207	C-5	R226	F-4	R252	H-5	R275	J-1
C126	E-3	C254	H-5	CR214	D-5			DS273	G-2	Q114	C-2	Q262	G-5	R103	C-4	R126	E-2	R208	C-5	R227	E-5	R254	H-5	R276	H-4
C136	E-3	C258	I-5	CR215	E-5					Q116	C-3	Q264	G-5	R104	B-1	R128	D-3	R209	D-5	R231	F-4	R262	G-5	R278	G-5
C224	E-5	C259	J-4	CR224	F-5	VR237	E-5			Q124	D-2	Q278	F-4	R106	B-2	R132	E-3	R211	C-5	R232	F-5	R263	G-5	R279	H-4
C227	E-5	C272	G-3	CR239	F-4	VR258	I-4			Q126	D-3			R108	B-3	R133	E-4	R213	D-5	R234	F-5	R266	G-5	R282	F-3
C236	F-5	C273	G-4	CR241	I-2	VR281	F-3	L259	J-4	Q134	F-2			R112	C-3	R134	E-1	R215	D-5	R236	F-4	R267	G-5	R285	E-4
C241	G-3	C274	G-4	CR247	I-2	VR282	F-3			Q136	E-3			R113	C-4	R136	E-2	R216	D-5	R239	F-4	R268	G-4	R286	E-2
C242	F-3	C279	H-4	CR253	H-6					Q138	C-4			R116	B-2	R138	E-3	R217	D-5	R242	G-4	R269	G-4	R287	E-3
C248	H-3			CR255	J-4					Q214	D-5			R118	C-3	R140	C-4	R218	D-5	R243	G-2	R270	G-2		
C249	G-3			CR262	G-5					Q222	F-5			R122	D-2	R202	C-5	R219	C-5	R245	H-2	R271	G-4		
C251	H-5			CR264	G-5					Q226	F-5			R123	D-4	R203	D-5	R222	E-5	R248	H-2	R273	G-2		

REV. B, SEPT. 1974

DEFLECTIO

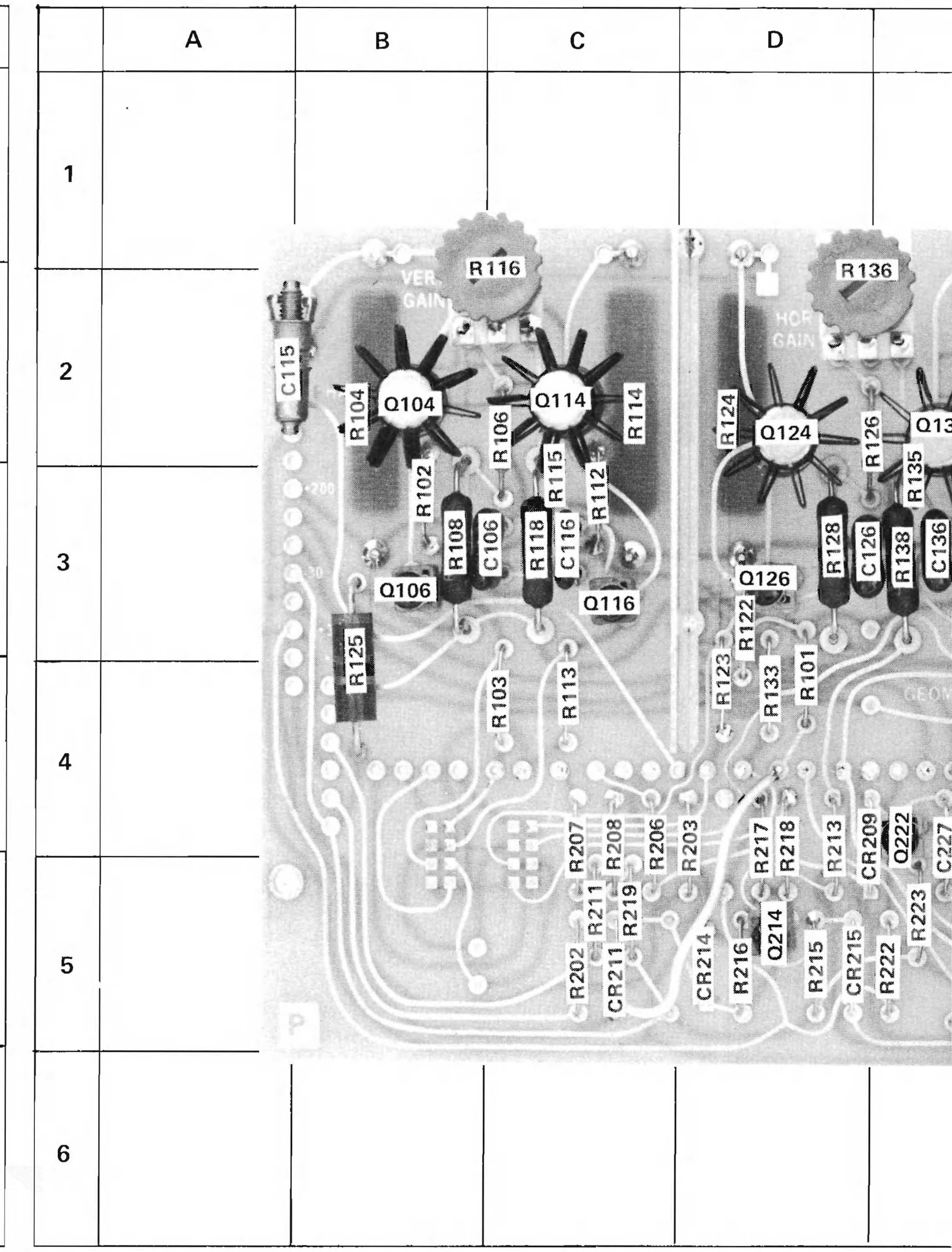

CKT NO	GRID LOC	CKT NO	GRID LOC	CKT NO	GRID LOC	CKT NO	GRID LOC	CKT NO	GRID LOC	CKT NO	G L
C106	B-3	C251	H-5	CR209	E-5	CR262	G-5	VR237	E-5	DS271	
C115	A-2	C252	H-5	CR211	C-5	CR264	G-5	VR258	I-5	DS272	
C116	C-3	C253	I-5	CR214	D-5	CR269	F-4	VR281	F-3	DS273	
C126	E-3	C254	H-5	CR215	D-5			VR282	F-3		
C136	E-3	C258	I-5	CR224	F-5						
C224	E-5	C259	J-4	CR239	F-4					L259	
C227	E-5	C272	G-3	CR241	I-2						
C236	F-5	C273	G-4	CR247	I-2						
C241	G-3	C274	G-3	CR252	H-5						
C242	F-3	C279	H-4	CR253	H-5						
C248	H-3	C281	F-3	CR255	J-4						
C249	G-3			CR256	H-5						

Ⓑ Ī REV. FEB 1974

DEFLECTION AMPLIFIER/HIGH-VOLTAGE BOARD PARTS LOCATION GRID

Below SN B050000

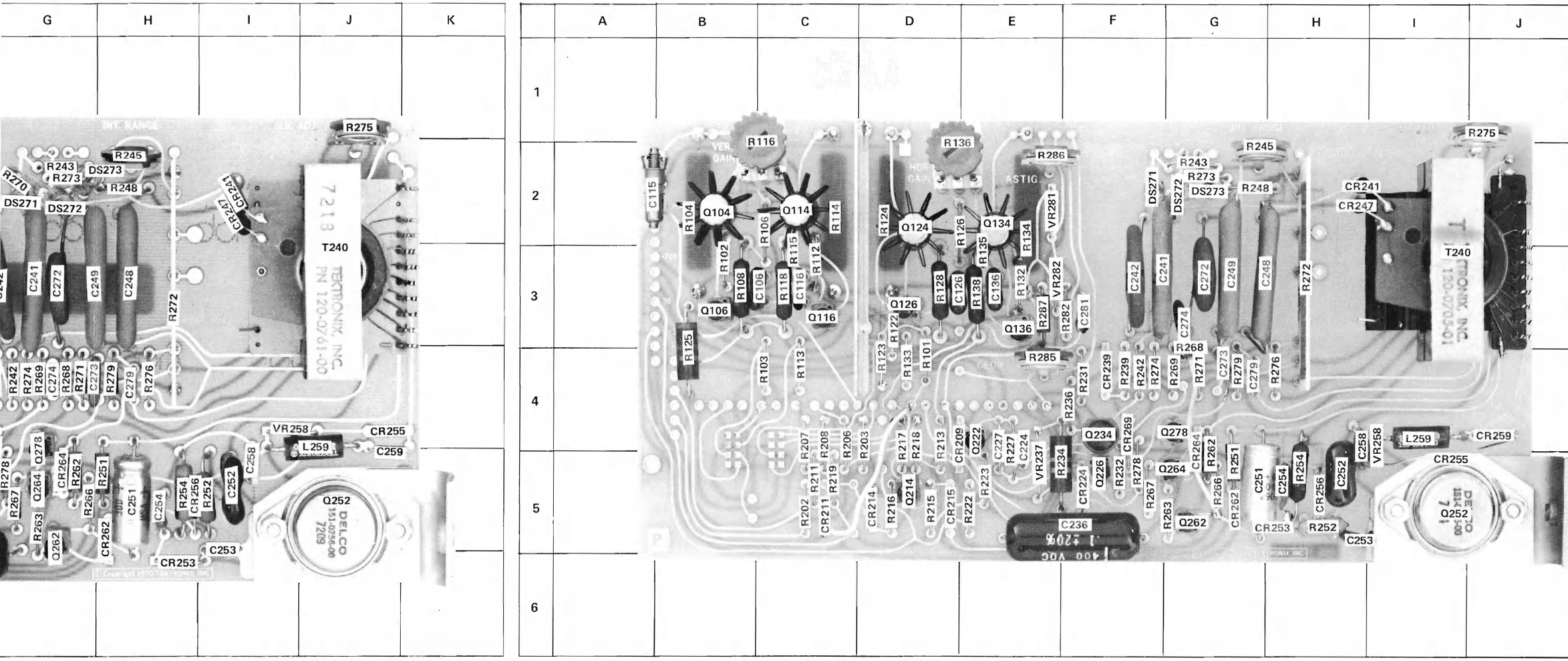

CKT NO	GRID LOC	CKT NO	GRID LOC	CKT NO	GRID LOC	CKT NO	GRID LOC	CKT NO	GRID LOC	CKT NO	GRID LOC
	E-4	R124	D-1	R206	E-5	R223	E-5	R251	G-5	R274	G-4
	B-3	R125	B-4	R207	C-5	R226	F-4	R252	H-5	R275	J-1
	C-4	R126	E-2	R208	C-5	R227	E-5	R254	H-5	R276	H-4
	B-1	R128	D-3	R209	D-5	R231	F-4	R262	G-5	R278	G-5
	B-2	R132	E-3	R211	C-5	R232	F-5	R263	G-5	R279	H-4
	B-3	R133	E-4	R213	D-5	R234	F-5	R266	G-5	R282	F-3
	C-3	R134	E-1	R215	D-5	R236	F-4	R267	G-5	R285	E-4
	C-4	R136	E-2	R216	D-5	R239	F-4	R268	G-4	R286	E-2
	B-2	R138	E-3	R217	D-5	R242	G-4	R269	G-4	R287	E-3
	C-3	R140	C-4	R218	D-5	R243	G-2	R270	G-2		
	D-2	R202	C-5	R219	C-5	R245	H-2	R271	G-4		
	D-4	R203	D-5	R222	E-5	R248	H-2	R273	G-2		

CKT NO	GRID LOC	CKT NO	GRID LOC	CKT NO	GRID LOC	CKT NO	GRID LOC	CKT NO	GRID LOC	CKT NO	GRID LOC	CKT NO	GRID LOC	CKT NO	GRID LOC	CKT NO	GRID LOC	CKT NO	GRID LOC	CKT NO	GRID LOC	CKT NO	GRID LOC	CKT NO	GRID LOC	CKT NO	GRID LOC
C106	B-3	C251	H-5	CR209	E-5	CR262	G-5	VR237	E-5	DS271	G-2	Q104	B-2	Q252	J-5	R101	D-4	R122	D-3	R202	C-5	R222	E-5	R251	G-5	R274	F-4
C115	A-2	C252	H-5	CR211	C-5	CR264	G-5	VR258	I-5	DS272	G-2	Q106	B-3	Q262	G-5	R102	B-3	R123	D-4	R203	D-5	R223	E-5	R252	H-5	R275	J-1
C116	C-3	C253	I-5	CR214	D-5	CR269	F-4	VR281	F-3	DS273	G-2	Q114	C-2	Q264	G-5	R103	C-4	R124	D-2	R206	C-5	R227	E-5	R254	H-5	R276	H-4
C126	E-3	C254	H-5	CR215	D-5			VR282	F-3			Q116	C-3	Q278	G-4	R104	B-2	R125	B-4	R297	C-5	R231	F-4	R262	G-5	R278	F-5
C136	E-3	C258	I-5	CR224	F-5							Q124	D-2			R106	C-2	R126	E-2	R208	C-5	R232	F-5	R263	G-5	R279	G-4
C224	E-5	C259	J-4	CR239	F-4							Q126	D-3			R108	B-3	R128	D-3	R211	C-5	R234	F-5	R266	G-5	R282	F-3
C227	E-5	C272	G-3	CR241	I-2					L259	I-4	Q134	E-2			R112	C-3	R132	E-3	R213	D-5	R236	F-4	R267	G-5	R285	E-4
C236	F-5	C273	G-4	CR247	I-2							Q136	E-3			R113	C-4	R133	D-4	R215	D-5	R239	F-4	R268	G-4	R286	E-2
C241	G-3	C274	G-3	CR252	H-5							Q214	D-5			R114	C-2	R134	E-2	R216	D-5	R242	F-4	R269	G-4	R287	E-3
C242	F-3	C279	H-4	CR253	H-5							Q222	E-5			R115	C-3	R135	E-3	R217	D-5	R243	G-2	R271	G-4		
C248	H-3	C281	F-3	CR255	J-4							Q226	F-5			R116	B-1	R136	E-2	R218	D-5	R245	H-2	R272	G-3	T240	J-3
C249	G-3			CR256	H-5							Q234	F-4			R118	C-3	R138	E-3	R219	C-5	R248	H-2	R273	G-2		

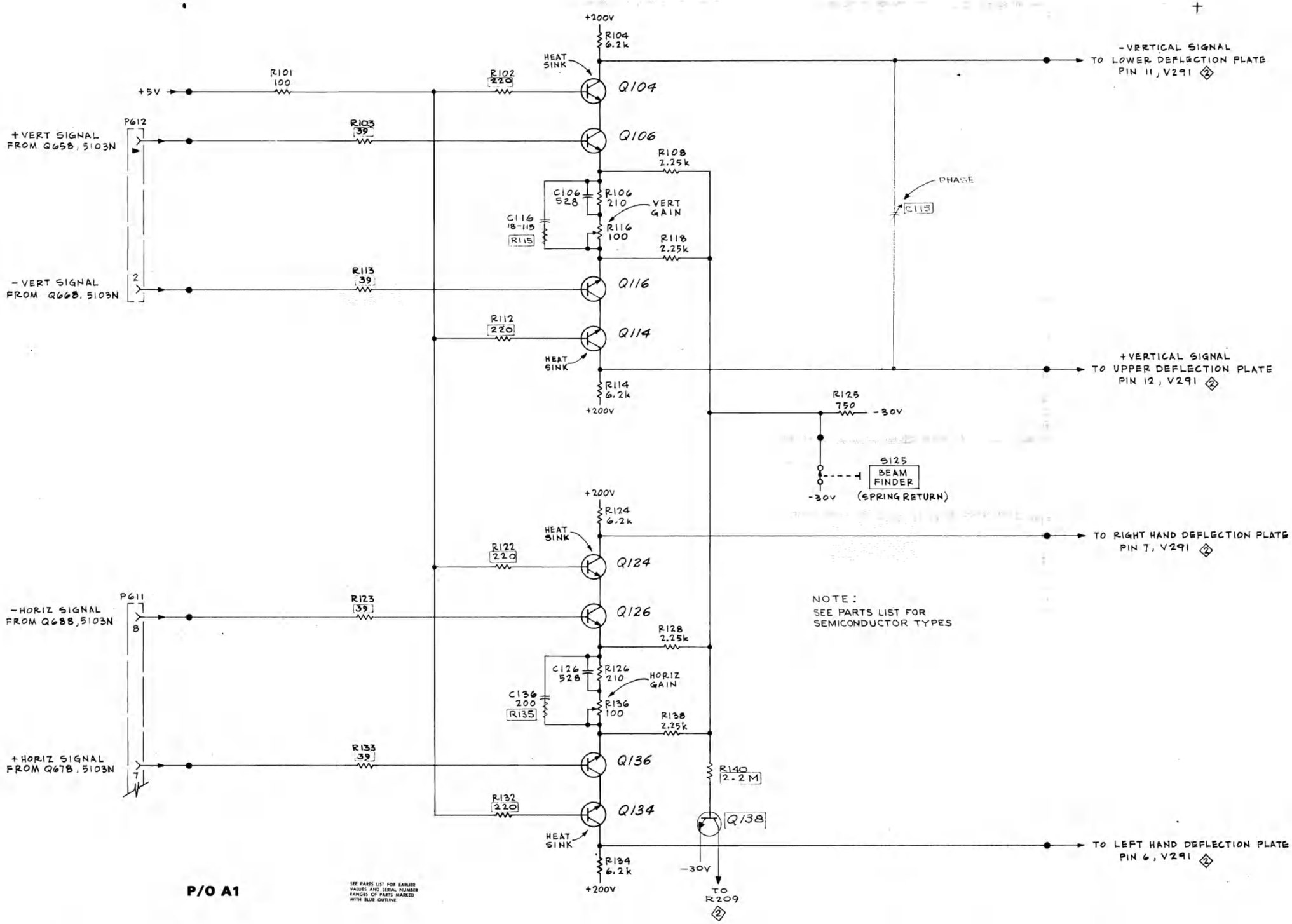

D11/D15

REV. D, SEPT 1974

DEFLECTION AMPLIFIERS ◇1

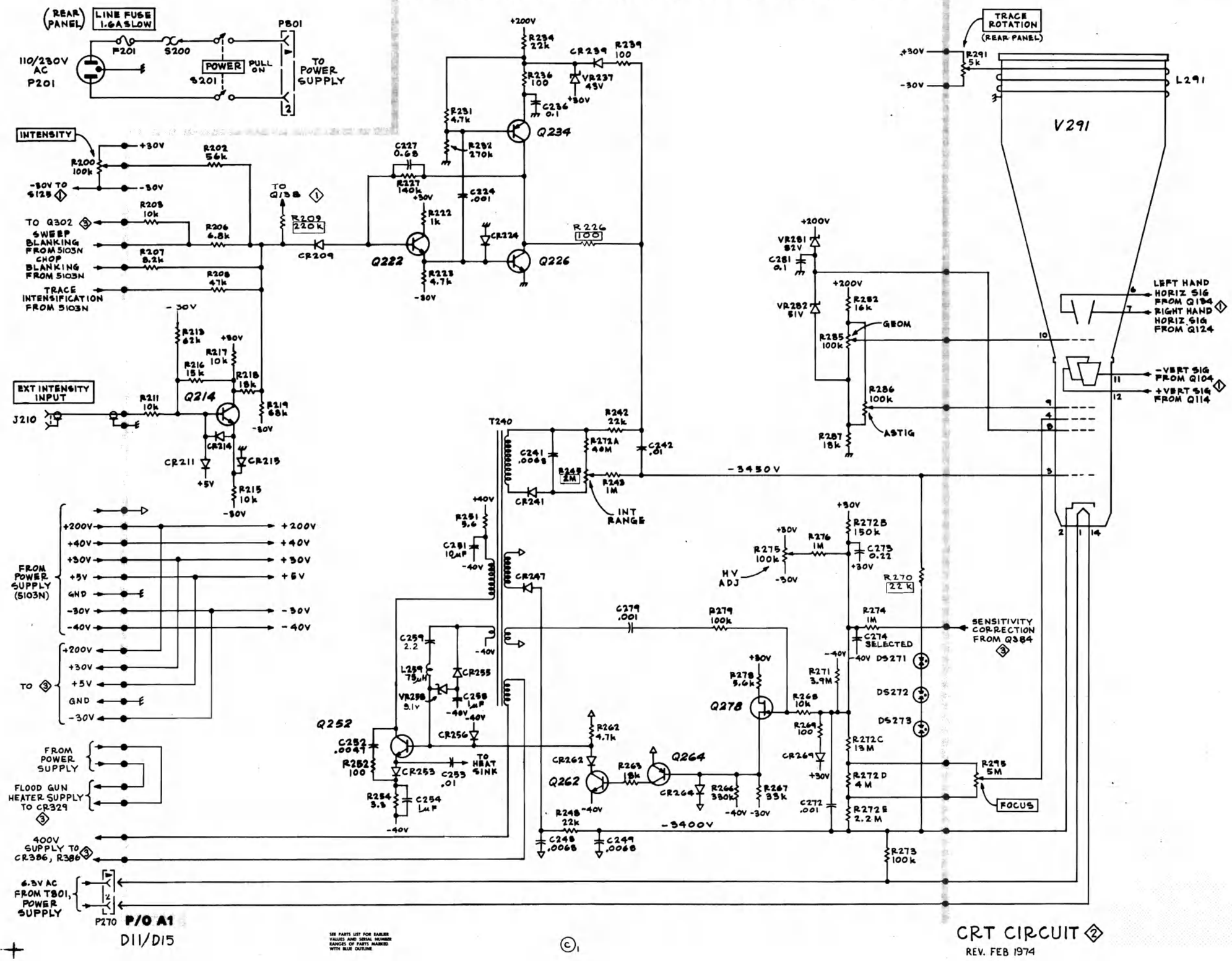

SEE PARTS LIST FOR EARLIER VALUES AND SERIAL NUMBER RANGES OF PARTS MARKED WITH BLUE OUTLINE.

©1

CRT CIRCUIT ◇2

REV. FEB 1974

STORAGE BOARD PARTS LOCATION GRID

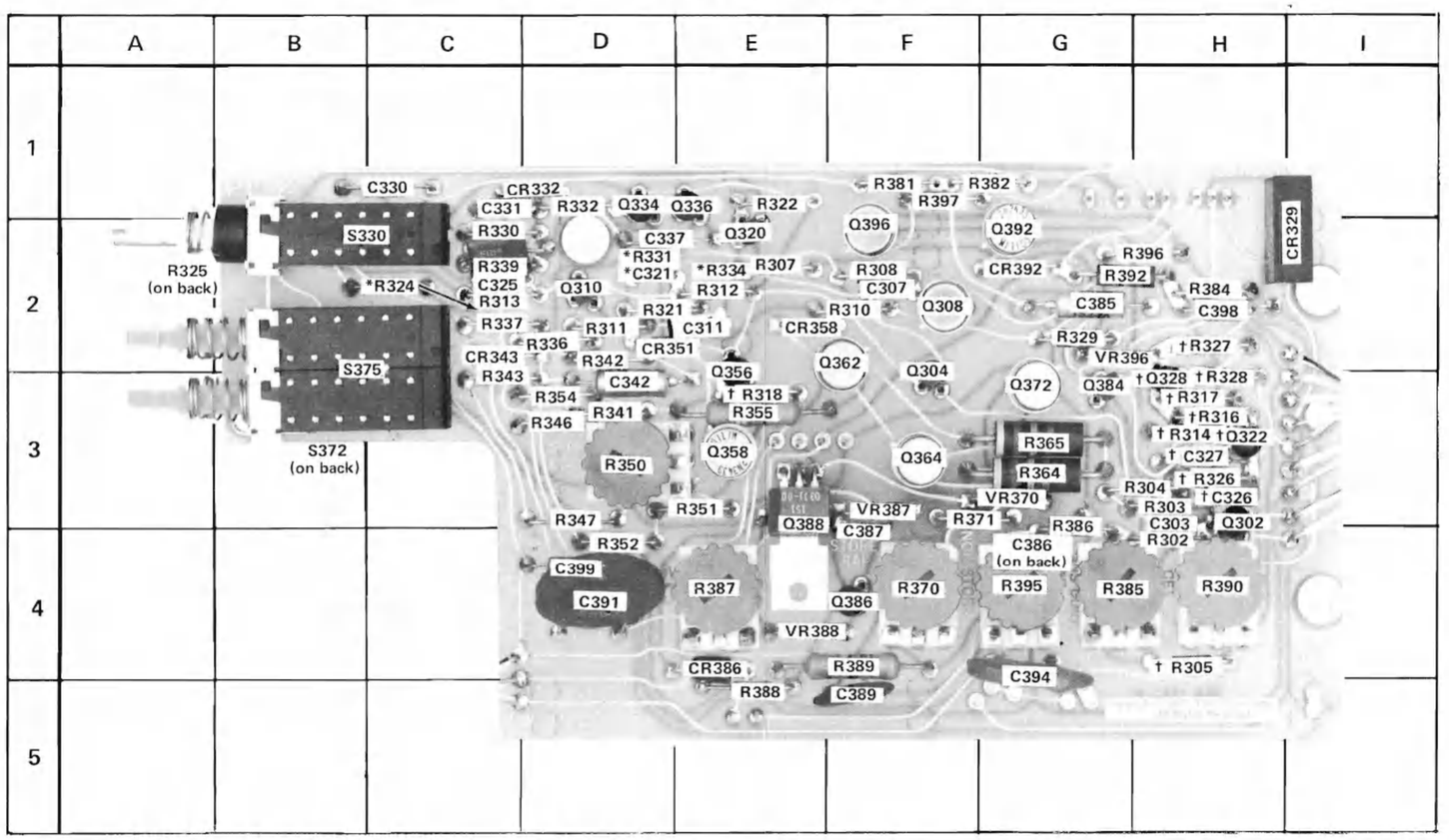

CKT NO	GRID LOC	CKT NO	GRID LOC	CKT NO	GRID LOC	CKT NO	GRID LOC	CKT NO	GRID LOC	CKT NO	GRID LOC	CKT NO	GRID LOC	CKT NO	GRID LOC	CKT NO	GRID LOC
C303	H-3	CR329	I-2	VR370	G-3	Q302	H-3	S330	B-2	R302	H-4	R327	H-2	R355	C-3		
C307	F-2	CR332	C-1	VR387	F-3	Q304	F-2	S372	B-3	R303	H-3	R328	H-3	R364	G-3		
C311	E-2	CR343	C-2	VR388	E-4	Q308	F-2	S375	B-2	R304	H-3	R329	G-2	R365	G-3		
C321	D-2	CR351	D-2	VR396	G-2	Q310	D-2			R305	H-4	R330	C-2	R370	F-4		
C325	C-2	CR358	E-2			Q320	E-2			R307	E-2	R331	D-2	R371	F-3		
C326	H-3	CR386	E-4			Q322	H-3			R308	F-2	R332	D-1	R381	F-1		
C327	H-3	CR392	G-2			Q328	H-3			R310	F-2	R334	E-2	R382	G-1		
C330	C-1					Q334	D-1			R311	D-2	R336	D-2	R384	H-2		
C331	C-1					Q336	E-1			R312	E-2	R337	C-2	R385	G-4		
C337	D-2					Q356	E-2			R313	C-2	R339	C-2	R386	G-4		
C342	D-3					Q358	E-3			R314	H-3	R341	D-3	R387	E-4		
C385	G-2					Q362	F-2			R316	H-3	R342	D-2	R388	E-5		
C386	G-4					Q364	F-3			R317	H-3	R343	C-3	R389	F-4		
C387	F-4					Q372	G-3			R318	E-3	R346	D-3	R390	H-4		
C389	F-5					Q384	G-3			R321	D-2	R347	D-3	R392	G-2		
C391	D-4					Q386	F-4			R322	E-1	R350	D-3	R395	G-4		
C394	G-4					Q388	E-3			R324	C-2	R351	C-3	R396	H-2		
C398	H-2					Q392	G-2			R325	A-2	R352	D-4	R397	F-1		
C399	D-4					Q396	F-2			R326	H-3	R354	D-3				

*See Parts List for serial number ranges.

†Used only in D15.

© REV. FEB 1974

400V FROM T240 2
CR386
C386 .047
R386 10
R387 1k
R388 5.11K
+370V ADJ
VR388 6.2 V
Q386
VR387 43V
C387 .001
C389 .01
R389 340k
+30V
TP2 +370V
Q388
+370V
FROM 2
+200V → +200V
+30V → +30V
+5V → +5V
GND
-30V → -30V
C399 5.6µF
C398 1µF
VR370 110V
R370 250k
R371 39k
+370V
+30V
STORE BAL
Q372
HEAT SINK
Q384
SENS CORRECT
R385 5k
C385 22µF
R384 12k
-30V
SENSITIVITY CORRECTION TO R274 2
P389
S372 A
(ERASE SELECT) UP
S375 A
(STORE) UP
TP4 STORE BAL
R364 47k
R365 47k
Q364
Q362
HEAT SINK
(ERASE SELECT) LWR
S372 B
(STORE) LWR
S375 B
R381 330k
R382 330k
CR358
Q358
TP1 STORE LEVEL
Q356
R352 10k
R351 20k
CR351
R355 499k
R354 150k
C391 0.1
R336 5.1k
R342 100
C342 15µF
CR343
R346 18k
STORE LEVEL
R350 5k
R343 47k
R347 53.6k
R339 62k
C337 0.1
CR332
R337 10k
R341 75K
R334 6.2K
R331 2K
Q336
R330 1M
C331 .01
R332 2K
Q334
S330 ERASE
C330 .1µF
Q328
R324 24k
BRIGHTNESS
R325 20k
CE1
TP3 CE1
R390 250k
Q392
CR392
R392 75k
-30V
LOWER SCREEN
UPPER SCREEN
V291
CE 1
ANODE
FLOOD GUNG
P389 8 10 4 7 9 5 6 3 2
ENHANCE CIRCUIT D15 ONLY
R317 12K
R316 22K
R327 1.3K
Q322
R328 5.6K
C327 0.22
R326 51K
R314 4.7K
ENHANCE
R2008 20K
R318 100K
C326 0.001
R305 33K
R313 2k
C325 0.2
Q310
R312 100k
R322 100k
Q320
R311 1.2M
R321 1.2M
C311 2.2
C321 2.2
R310 22k
SWEEP BLANKING FROM R203 2
Q302
C303 .001
R302 1k
R303 51k
R304 470k
Q304
C307 .001
R307 22k
R308 10k
Q308
Q396
R396 62k
VR396 140V
R397 100
R395 100k
C394 0.1
NON STORE
SEE PARTS LIST FOR EARLIER VALUES AND SERIAL NUMBER RANGES OF PARTS MARKED WITH BLUE OUTLINE.
CR329
FLOOD GUN HEATER SUPPLY FROM S103N
R329 100k
P/O A1

©
STORAGE CIRCUIT 3 GAB REV. FEB 1974

AUXILIARY BOARD PARTS LOCATION GRID

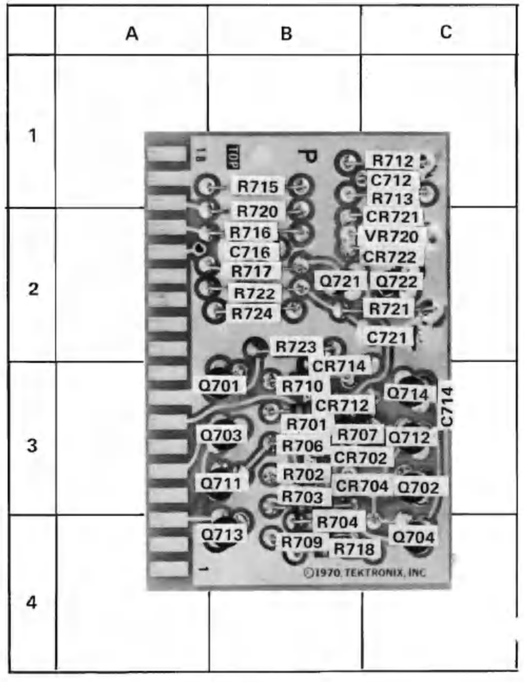

CKT NO	GRID LOC	CKT NO	GRID LOC
C712	C-1	Q721	B-2
C714	C-3	Q722	C-2
C716	B-2		
C721	C-2	R701	B-3
		R702	B-3
CR702	C-3	R703	B-3
CR704	C-3	R704	B-4
CR712	B-3	R706	B-3
CR714	B-3	R707	B-3
CR721	C-2	R709	B-4
CR722	C-2	R710	B-3
		R712	C-1
VR720	C-2	R713	C-1
		R715	B-1
Q701	B-3	R716	B-2
Q702	C-3	R717	B-2
Q703	B-3	R718	B-4
Q704	C-4	R720	B-2
Q711	B-3	R721	C-2
Q712	C-3	R722	B-2
Q713	B-4	R723	B-2
Q714	C-3	R724	B-2

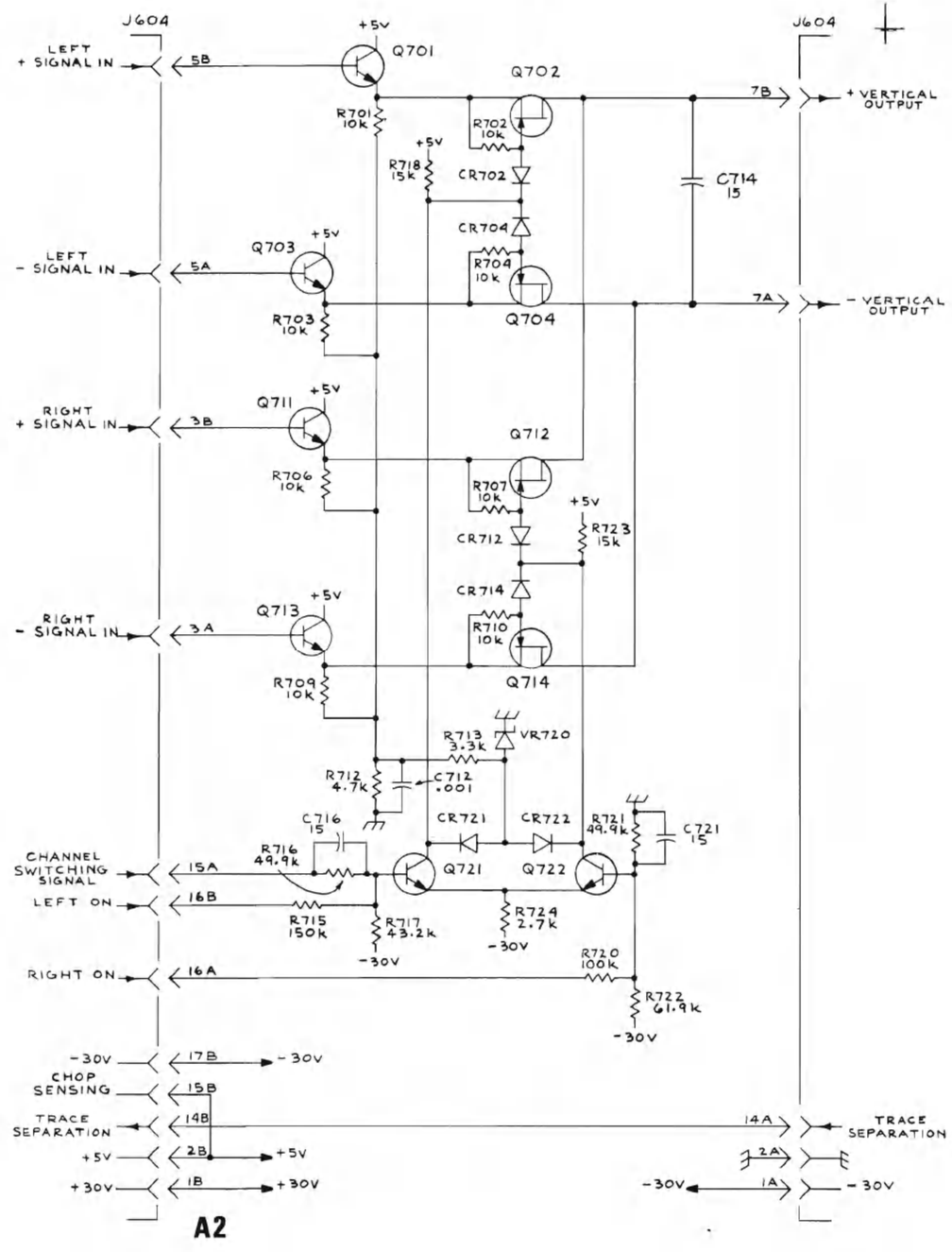

REPLACEABLE MECHANICAL PARTS

PARTS ORDERING INFORMATION

Replacement parts are available from or through your local Tektronix, Inc. Field Office or representative.

Changes to Tektronix instruments are sometimes made to accommodate improved components as they become available, and to give you the benefit of the latest circuit improvements developed in our engineering department. It is therefore important, when ordering parts, to include the following information in your order: Part number, instrument type or number, serial number, and modification number if applicable.

If a part you have ordered has been replaced with a new or improved part, your local Tektronix, Inc. Field Office or representative will contact you concerning any change in part number.

Change information, if any, is located at the rear of this manual.

SPECIAL NOTES AND SYMBOLS

X000	Part first added at this serial number
00X	Part removed after this serial number

FIGURE AND INDEX NUMBERS

Items in this section are referenced by figure and index numbers to the illustrations.

INDENTATION SYSTEM

This mechanical parts list is indented to indicate item relationships. Following is an example of the indentation system used in the description column.

1 2 3 4 5 *Name & Description*

Assembly and/or Component
Attaching parts for Assembly and/or Component
- - - * - - -
Detail Part of Assembly and/or Component
Attaching parts for Detail Part
- - - * - - -
Parts of Detail Part
Attaching parts for Parts of Detail Part
- - - * - - -

Attaching Parts always appear in the same indentation as the item it mounts, while the detail parts are indented to the right. Indented items are part of, and included with, the next higher indentation. The separation symbol - - - * - - - indicates the end of attaching parts.

Attaching parts must be purchased separately, unless otherwise specified.

ITEM NAME

In the Parts List, an Item Name is separated from the description by a colon (:). Because of space limitations, an Item Name may sometimes appear as incomplete. For further Item Name identification, the U.S. Federal Cataloging Handbook H6-1 can be utilized where possible.

ABBREVIATIONS

"	INCH	ELCTRN	ELECTRON	IN	INCH	SE	SINGLE END
#	NUMBER SIZE	ELEC	ELECTRICAL	INCAND	INCANDESCENT	SECT	SECTION
ACTR	ACTUATOR	ELCTLT	ELECTROLYTIC	INSUL	INSULATOR	SEMICOND	SEMICONDUCTOR
ADPTR	ADAPTER	ELEM	ELEMENT	INTL	INTERNAL	SHLD	SHIELD
ALIGN	ALIGNMENT	EPL	ELECTRICAL PARTS LIST	LPHLDR	LAMPHOLDER	SHLDR	SHOULDERED
AL	ALUMINUM	EQPT	EQUIPMENT	MACH	MACHINE	SKT	SOCKET
ASSEM	ASSEMBLED	EXT	EXTERNAL	MECH	MECHANICAL	SL	SLIDE
ASSY	ASSEMBLY	FIL	FILLISTER HEAD	MTG	MOUNTING	SLFLKG	SELF-LOCKING
ATTEN	ATTENUATOR	FLEX	FLEXIBLE	NIP	NIPPLE	SLVG	SLEEVING
AWG	AMERICAN WIRE GAGE	FLH	FLAT HEAD	NON WIRE	NOT WIRE WOUND	SPR	SPRING
BD	BOARD	FLTR	FILTER	OBD	ORDER BY DESCRIPTION	SQ	SQUARE
BRKT	BRACKET	FR	FRAME or FRONT	OD	OUTSIDE DIAMETER	SST	STAINLESS STEEL
BRS	BRASS	FSTNR	FASTENER	OVH	OVAL HEAD	STL	STEEL
BRZ	BRONZE	FT	FOOT	PH BRZ	PHOSPHOR BRONZE	SW	SWITCH
BSHG	BUSHING	FXD	FIXED	PL	PLAIN or PLATE	T	TUBE
CAB	CABINET	GSKT	GASKET	PLSTC	PLASTIC	TERM	TERMINAL
CAP	CAPACITOR	HDL	HANDLE	PN	PART NUMBER	THD	THREAD
CER	CERAMIC	HEX	HEXAGON	PNH	PAN HEAD	THK	THICK
CHAS	CHASSIS	HEX HD	HEXAGONAL HEAD	PWR	POWER	TNSN	TENSION
CKT	CIRCUIT	HEX SOC	HEXAGONAL SOCKET	RCPT	RECEPTACLE	TPG	TAPPING
COMP	COMPOSITION	HLCPS	HELICAL COMPRESSION	RES	RESISTOR	TRH	TRUSS HEAD
CONN	CONNECTOR	HLEXT	HELICAL EXTENSION	RGD	RIGID	V	VOLTAGE
COV	COVER	HV	HIGH VOLTAGE	RLF	RELIEF	VAR	VARIABLE
CPLG	COUPLING	IC	INTEGRATED CIRCUIT	RTNR	RETAINER	W/	WITH
CRT	CATHODE RAY TUBE	ID	INSIDE DIAMETER	SCH	SOCKET HEAD	WSHR	WASHER
DEG	DEGREE	IDENT	IDENTIFICATION	SCOPE	OSCILLOSCOPE	XFMR	TRANSFORMER
DWR	DRAWER	IMPLR	IMPELLER	SCR	SCREW	XSTR	TRANSISTOR

CROSS INDEX MFR. CODE NUMBER TO MANUFACTURER

MFR.CODE	MANUFACTURER	ADDRESS	CITY,STATE,ZIP
0000C	GETTIG ENGINEERING AND MANUFACTURING CO.		SPRINGMILL, PA 16875
00779	AMP, INC.	P. O. BOX 3608	HARRISBURG, PA 17105
05820	WAKEFIELD ENGINEERING, INC.	AUDUBON ROAD	WAKEFIELD, MA 01880
12327	FREEWAY CORP.	9301 ALLEN DR.	CLEVELAND, OH 44125
12697	CLAROSTAT MFG. CO., INC.	LOWER WASHINGTON ST.	DOVER, NH 03820
22526	BERG ELECTRONICS, INC.	YOUK EXPRESSWAY	NEW CUMBERLAND, PA 17070
23499	GAVITT WIRE AND CABLE, DIVISION OF RSC INDUSTRIES, INC.	455 N. QUINCE ST.	ESCONDIDO, CA 92025
24931	SPECIALTY CONNECTOR CO., INC.	3560 MADISON AVE.	INDIANAPOLIS, IN 46227
59730	THOMAS AND BETTS CO., THE	36 BUTLER ST.	ELIZABETH, NJ 07207
70485	ATLANTIC INDIA RUBBER WORKS, INC.	571 W. POLK ST.	CHICAGO, IL 60607
71590	CENTRALAB ELECTRONICS, DIV. OF GLOBE-UNION, INC.	5757 N. GREEN BAY AVE.	MILWAUKEE, WI 53201
71785	TRW ELECTRONIC COMPONENTS, CINCH CONNECTOR OPERATIONS	1501 MORSE AVE.	ELK GROVE VILLAGE, IL 60007
73743	FISCHER SPECIAL MFG. CO.	446 MORGAN ST.	CINCINNATI, OH 45206
74445	HOLO-KROME CO.	31 BROOK ST. WEST	HARTFORD, CT 06110
74921	ITEN FIBRE CO., THE	4001 BENEFIT AVE., P O BOX 9	ASHTABULA, OH 44004
75915	LITTELFUSE, INC.	800 E. NORTHWEST HWY	DES PLAINES, IL 60016
76854	OAK INDUSTRIES, INC., SWITCH DIV.	S. MAIN ST.	CRYSTAL LAKE, IL 60014
77250	PHEOLL MANUFACTURING CO., DIVISION OF ALLIED PRODUCTS CORP.	5700 W. ROOSEVELT RD.	CHICAGO, IL 60650
78189	ILLINOIS TOOL WORKS, INC. SHAKEPROOF DIVISION	ST. CHARLES ROAD	ELGIN, IL 60120
78471	TILLEY MFG. CO.	900 INDUSTRIAL RD.	SAN CARLOS, CA 94070
79136	WALDES, KOHINOOR, INC.	47-16 AUSTEL PLACE	LONG ISLAND CITY, NY 11101
79807	WROUGHT WASHER MFG. CO.	2100 S. O BAY ST.	MILWAUKEE, WI 53207
80009	TEKTRONIX, INC.	P. O. BOX 500	BEAVERTON, OR 97005
83385	CENTRAL SCREW CO.	2530 CRESCENT DR.	BROADVIEW, IL 60153
86445	PENN FIBRE AND SPECIALTY CO., INC.	2032 E. WESTMORELAND ST.	PHILADELPHIA, PA 19134
98278	MALCO A MICRODOT CO., INC., CONNECTOR AND CABLE DIVISION	220 PASADENA AVE.	SOUTH PASADENA, CA 91030

Fig. & Index No.	Tektronix Part No.	Serial/Model No. Eff	Dscont	Qty	1 2 3 4 5 Name & Description	Mfr Code	Mfr Part Number
1-1	----- -----			1	CKT BOARD ASSY:AUXILIARY(SEE A2 EPL)		
-2	200-1218-00			1	RTNR,SCALE,CRT:	80009	200-1218-00
-3	211-0188-00			2	SCREW,MACHINE:4-40 X 0.30"INCH,SST	80009	211-0188-00
-4	354-0233-00	B010100	B030156X	2	RING,RETAINING:0.100 ID X 0.203 INCH OD	79136	X5133-14
-5	337-1440-00[1]	B010100	B081501	1	SHLD,IMPLOSION:	80009	337-1440-00
	337-1440-01	B081502		1	SHLD,IMPLOSION:	80009	337-1440-01
-6	386-1946-00			1	SUPPORT,CRT:		
-7	348-0279-00			2	PAD,CUSHIONING:3.50 INCH LONG	80009	348-0279-00
-8	348-0070-01			4	PAD,CUSHIONING:0.69 INCH,RUBBER	80009	348-0070-01
-9	348-0145-00			2	GROMMET,PLASTIC:U-SHP,1.0 X 0.42 INCH	80009	348-0145-00
-10	344-0226-00			1	CLIP,CABLE:	80009	344-0226-00
					(ATTACHING PARTS)		
-11	211-0587-00			1	SCREW,MACHINE:6-32 X 0.188 INCH,HSB	80009	211-0587-00
					- - - * - - -		
-12	334-1379-00			1	LABEL:CRT,ADHESIVE BACK	80009	334-1379-00
-13	337-1419-00[2]	B010100	B069999	1	SHIELD,CRT:	80009	337-1419-00
	337-1419-05[2]	B070000		1	SHIELD SECT,CRT:	80009	337-1419-05
	337-1419-00[3]	B010100	B029999	1	SHIELD,CRT:	80009	337-1419-00
	337-1419-05[3]	B030000		1	SHIELD,SECT,CRT:	80009	337-1419-05
-14	337-1420-00			1	SHIELD SECT,CRT:	80009	337-1420-00
-15	354-0409-00			1	RING,CRT CLAMP:	80009	354-0409-00
					(ATTACHING PARTS)		
-16	211-0632-00			1	SCREW,MACHINE:6-32 X 2.250,FILH,STL,CD PL	83385	OBD
-17	343-0123-01			2	CLAMP,RET.,ELEC:CRT,REAR	80009	343-0123-01
-18	220-0444-00			1	NUT,PLAIN,SQ:6-32 X 0.250 INCH,STL	77250	OBD
-19	211-0507-00			2	SCREW,MACHINE:6-32 X 0.312 INCH,PNH STL	83385	OBD
-20	407-0922-00			1	BRACKET,CRT CLP:	80009	407-0922-00
					- - - * - - -		
-21	384-1064-00			1	EXTENSION SHAFT:	80009	384-1064-00
-22	119-0238-00[2]	B010100	B104737	1	COIL,CAL:	80009	119-0238-00
	119-0373-00[2]	B104738		1	COIL,CALIBRATIO:	80009	119-0373-00
	119-0238-00[3]	B010100	B061941	1	COIL,CAL:	80009	119-0238-00
	119-0373-00[3]	B061942		1	COIL,CALIBRATIO:	80009	119-0373-00
					(ATTACHING PARTS)		
	210-0442-00			2	NUT,PLAIN,HEX.:3-48 X 0.187 INCH,CD PL BRS	73743	3014-402
	210-0004-00			2	WASHER,LOCK:INTL,0.12 ID X 0.26"OD,STL	78189	1204-00-00-0541C
	210-0994-00			2	WASHER,FLAT:0.125 ID X 0.25" OD,STL	83385	OBD
	210-0935-00			2	WASHER,NONMETAL:FIBER,0.14 IDX 0.375"OD	74921	OBD
-23	361-0059-01			1	SPACER,CUR LOOP:1.094 X 0.344 X 0.125 INCH	80009	361-0059-01
-24	210-0593-00			2	NUT,FINISHING:0.25 HEX X 0.312" LONG,BRS	80009	210-0593-00
					- - - * - - -		
-25	358-0216-00			1	BUSHING,PLASTIC:0.257 ID X 0.412 INCH OD	80009	358-0216-00
-26	366-0494-00			1	KNOB:GRAY	80009	366-0494-00
	213-0153-00			1	. SETSCREW:5-40 X 0.125 INCH,HEX SOC STL	74445	OBD
-27	366-0494-00[2]			1	KNOB:GRAY	80009	366-0494-00
	213-0153-00			1	. SETSCREW:5-40 X 0.125 INCH,HEX SOC STL	74445	OBD
-28	366-1319-01[3]			1	KNOB:	80009	366-1319-01
	213-0725-00			1	. SETSCREW:3-48 X 0.94,0.099 OD,STL BK	74445	OBD
-29	366-1315-00[3]	B010100	B040629	1	KNOB:GRAY	80009	366-1315-00
	366-1077-00	B040630		1	KNOB:GRAY	80009	366-1077-00
	213-0153-00			1	. SETSCREW:5-40 X 0.125 INCH,HEX SOC STL	74445	OBD
-30	366-1023-01			1	KNOB:GRAY	80009	366-1023-01
	213-0153-00			1	. SETSCREW:5-40 X 0.125 INCH,HEX SOC STL	74445	OBD
-31	366-1257-44			2	PUSH BUTTON:UPPER	80009	366-1257-44
-32	366-1257-45			2	PUSH BUTTON:LOWER	80009	366-1257-45
-33	366-1257-46			1	PUSH BUTTON:ERASE	80009	366-1257-46
-34	426-0681-00			5	FR,PUSH BUTTON:GRAY PLASTIC	80009	426-0681-00
-35	333-1410-00[2]			1	PANEL,FRONT:	80009	333-1410-00
-36	333-1541-00[3]			1	PANEL,FRONT:	80009	333-1541-00
-37	200-0608-00			1	COVER,VAR RES.:PLASTIC	80009	200-0608-00

[1]Part number changes on D11 only.
[2]D11 only.
[3]D15 only.

Fig. & Index No.	Tektronix Part No.	Serial/Model No. Eff	Dscont	Qty	1 2 3 4 5 Name & Description	Mfr Code	Mfr Part Number
1-38	----- -----			2	RESISTOR,VAR:(SEE R200A AND R200B EPL)		
					(ATTACHING PARTS FOR EACH)		
-39	210-0583-00			1	NUT,PLAIN,HEX.:0.25-32 X 0.312 INCH,BRS	73743	2X20224-402
-40	210-0940-00			1	WASHER,FLAT:0.25 ID X 0.375 INCH OD,STL	79807	OBD
-41	210-0046-00			1	WASHER,LOCK:INTL,0.26 ID X 0.40" OD,STL	78189	1214-05-00-0541C
					- - - * - - -		
-42	----- -----			1	RESISTOR,VAR:(SEE R295 EPL)		
					(ATTACHING PARTS)		
-43	358-0378-00			1	BUSHING,SLEEVE:PRESS MOUNT	80009	358-0378-00
					- - - * - - -		
-44	----- -----			1	SWITCH,PUSH:(SEE S125 EPL)		
-45	----- -----			1	RESISTOR,VAR:(SEE R291 EPL)		
					(ATTACHING PARTS)		
-46	220-0495-00			1	NUT,PLAIN,HEX.:0.375-32 X 0.438 INCH BRS	73743	OBD
-47	210-0978-00			1	WASHER,FLAT:0.375 ID X 0.50 INCH OD,STL	78471	OBD
-48	210-0012-00			1	WASHER,LOCK:INTL,0.375 ID X 0.50" OD STL	78189	1220-02-00-0541C
-49	210-0207-00			1	TERMINAL,LUG:0.375 INCH DIAMETER	12697	01136902
					- - - * - - -		
-50	----- -----			1	SWITCH,PUSH-PUL:(SEE S201 EPL)		
-51	376-0127-00			1	COUPLER,SHAFT:PLASTIC	80009	376-0127-00
-52	337-1421-00			1	SHIELD,ELEC:HIGH VOLTAGE	80009	337-1421-00
					(ATTACHING PARTS)		
-53	211-0504-00			3	SCREW,MACHINE:6-32 X 0.25 INCH,PNH STL	83385	OBD
					- - - * - - -		
-54	348-0115-00			4	GROMMET,PLASTIC:U-SHP,0.548 X0.462 INCH	80009	348-0115-00
-55	407-0896-00			1	BRACKET,CHASSIS:	80009	407-0896-00
					(ATTACHING PARTS)		
-56	211-0541-00			1	SCREW,MACHINE:6-32 X 0.25"100 DEG,FLH STL	83385	OBD
					- - - * - - -		
-57	200-1204-01			1	COVER,CRT,REAR:	80009	200-1204-01
					(ATTACHING PARTS)		
-58	210-0401-00			2	NUT,PLAIN,HEX.:6-32 X 0.312 INCH,CD PLATED	73743	3262-402
					- - - * - - -		
-59	161-0033-08			1	CABLE ASSY,PWR:	80009	161-0033-08
-60	358-0366-00			1	BSHG,STRAIN RLF:	80009	358-0366-00
	358-0365-00			1	BSHG,STRAIN RLF:	80009	358-0365-00
-61	200-1004-00			1	CABLE,NIP.,ELEC:0.265 ID X 0.38"OD W/FLG	80009	200-1004-00
-62	352-0076-00			1	FUSEHOLDER:W/HARDWARE	75915	342012
					(ATTACHING PARTS)		
-63	210-0873-00			1	WASHER,NONMETAL:0.5 ID X 0.688 INCH OD,NPRN	70485	OBD
					- - - * - - -		
-64	131-0955-00			1	CONNECTOR,RCPT,:BNC,FEMALE	24931	28JR200-1
					(ATTACHING PARTS)		
-65	210-0255-00			1	TERMINAL,LUG:0.391" ID INT TOOTH	80009	210-0255-00
					- - - * - - -		
-66	210-0201-00			1	TERMINAL,LUG:SE #4	78189	2104-04-00-2520N
					(ATTACHING PARTS)		
-67	210-0586-00			1	NUT,PLAIN,EXT W:4-40 X 0.25 INCH,STL	78189	OBD
					- - - * - - -		
-68	333-1426-00			1	PANEL,REAR:	80009	333-1426-00
-69	441-0991-00			1	CHAS,DSPL UNIT:MAIN	80009	441-0991-00
-60	210-0659-01			4	. EYELET,METALLIC:0.121 OD X 0.156 INCH LONG	80009	210-0659-01
-71	344-0131-00			4	. CLIP,SPG TENS:CIRCUIT BOARD MOUNTING	80009	344-0131-00
					(ATTACHING PARTS FOR CHASSIS)		
-72	211-0504-00			2	SCREW,MACHINE:6-32 X 0.25 INCH,PNH STL	83385	OBD
-73	211-0538-00			2	SCREW,MACHINE:6-32 X 0.312"100 DEG,FLH STL	83385	OBD
-74	210-0457-00			2	NUT,PLAIN,EXT W:6-32 X 0.312 INCH,STL	83385	OBD
					- - - * - - -		
-75	----- -----			1	SWITCH,THERMOSTATIC:(SEE S200 EPL)		
					(ATTACHING PARTS)		
-76	210-0586-00			2	NUT,PLAIN,EXT W:4-40 X 0.25 INCH,STL	78189	OBD
					- - - * - - -		

Fig. & Index No.	Tektronix Part No.	Serial/Model No. Eff	Dscont	Qty	1 2 3 4 5 Name & Description	Mfr Code	Mfr Part Number
1-77	344-0225-00			2	CLIP,CABLE:	80009	344-0225-00
-78	348-0067-00			1	GROMMET,PLASTIC:0.312 INCH DIA	80009	348-0067-00
-79	343-0088-00			3	CLAMP,LOOP:0.062 INCH DIA	80009	343-0088-00
-80	----- -----[1]			1	CKT BOARD ASSY:STORAGE(SEE A3 EPL)		
-81	131-0608-00			7	. CONTACT,ELEC:0.365 INCH LONG	22526	47357
	131-0589-00			8	. CONTACT,ELEC:0.46 INCH LONG	22526	47350
-82	136-0252-04			45	. CONTACT,ELEC:0.188 INCH LONG	22526	75060
-83	214-1611-00			5	. HEAT SINK,ELEC:0.280 ID,W/ 4-40 THREADS	05820	OBD
					(ATTACHING PARTS FOR EACH)		
-84	211-0007-00			1	. SCREW,MACHINE:4-40 X 0.188 INCH,PNH STL	83385	OBD
-85	210-0003-00			1	. WASHER,LOCK:EXT,0.123 ID X 0.245" OD,STL	78189	1104-00-00-0541C
					- - - * - - -		
	211-0018-00	XB080000		1	. SCREW,MACHINE:4-40 X 0.875 PNH,STL	83385	OBD
	166-0169-00	XB080000	B080751	1	. SPACER,SLEEVE:0.562 L X 0.114 ID STL CD	76854	10918-236
	361-0564-00	B081752		1	. SPACER,SLEEVE:0.50 L X 0.133 ID BRS CD	59730	2532
-86	214-1612-00	B010100	B079999	1	. HEAT SINK,XSTR:	80009	214-1612-00
	214-1612-01	B080000		1	. HEAT SINK,XSTR:	80009	214-1612-01
-87	----- -----			1	. SWITCH,PUSH:(SEE S375 EPL)		
-88	----- -----			1	. SWITCH,PUSH:(SEE S330 EPL)		
-89	----- -----			1	. SWITCH,PUSH:(SEE S372 EPL)		
-90	361-0411-00	B010100	B079999	10	. SPACER,PUSH SW:0.13 W X 0.375 INCH L,PLSTC	71590	J64285-00
	361-0411-00	B080000		6	. SPACER,PUSH SW:0.13 W X 0.375 INCH L,PLSTC	71590	J64285-00
	361-0542-00	B080000		4	. SPACER,SWITCH:PLASTIC	71590	J-64281
					(ATTACHING PARTS FOR CKT BD ASSY)		
-91	211-0008-00	B010100	B079999	4	SCREW,MACHINE:4-40 X 0.25 INCH,PNH STL	83385	OBD
	211-0008-00	B080000		3	SCREW,MACHINE:4-40 X 0.25 INCH,PNH STL	83385	OBD
					- - - * - - -		
-92	----- -----[2]			1	CKT BOARD ASSY:STORAGE(SEE A3 EPL)		
-93	131-0608-00			7	. CONTACT,ELEC:0.365 INCH LONG	22526	47357
	131-0589-00			8	. CONTACT,ELEC:0.46 INCH LONG	22526	47350
-94	136-0252-04			45	. CONTACT,ELEC:0.188 INCH LONG	22526	75060
-95	214-1611-00			5	. HEAT SINK,ELEC:0.280 ID,W/ 4-40 THREADS	05820	OBD
					(ATTACHING PARTS FOR EACH)		
-96	211-0007-00			1	. SCREW,MACHINE:4-40 X 0.188 INCH,PNH STL	83385	OBD
-97	210-0003-00			1	. WASHER,LOCK:EXT,0.123 ID X 0.245" OD,STL	78189	1104-00-00-0541C
					- - - * - - -		
	211-0018-00	XB040000		1	. SCREW,MACHINE:4-40 X 0.875 PNH,STL	83385	OBD
	166-0169-00	XB040000	B040375	1	. SPACER,SLEEVE:0.562 L X 0.114 ID STL CD	76854	10918-236
	361-0564-00	B040736		1	. SPACER,SLEEVE:0.50 L X 0.133 ID BRS CD	59730	2532
-98	214-1612-00	B010100	B039999	1	. HEAT SINK,XSTR:	80009	214-1612-00
	214-1612-01	B040000		1	. HEAT SINK,XSTR:	80009	214-1612-01
-99	----- -----			1	. SWITCH,PUSH:(SEE S375 EPL)		
-100	----- -----			1	. SWITCH,PUSH:(SEE S330 EPL)		
-101	----- -----			1	. SWITCH,PUSH:(SEE S372 EPL)		
-102	361-0411-00	B010100	B079999	10	. SPACER,PUSH SW:0.13 W X 0.375 INCH L,PLSTC	71590	J64285-00
	361-0411-00	B080000		6	. SPACER,PUSH SW:0.13 W X 0.375 INCH L,PLSTC	71590	J64285-00
	361-0542-00	B040000		4	. SPACER,SWITCH:PLASTIC	71590	J-64281
					(ATTACHING PARTS FOR CKT BD ASSY)		
-103	211-0008-00	B010100	B039999	4	SCREW,MACHINE:4-40 X 0.25 INCH,PNH STL	83385	OBD
	211-0008-00	B040000		3	SCREW,MACHINE:4-40 X 0.25 INCH,PNH STL	83385	OBD
					- - - * - - -		
-104	----- -----			1	CKT BOARD ASSY:HIGH VOLTAGE(SEE A1 EPL)		
	131-0566-00	XB050000		4	. LINK,TERM.CONNE:0.086 DIA X 2.375 INCH L	0000C	L-2007-1
-105	131-0589-00[1]	B010100	B089999	2	. CONTACT,ELEC:0.46 INCH LONG	22526	47350
	131-0608-00[1]	B090000		2	. CONTACT,ELEC:0.365 INCH LONG	22526	47357
	131-0589-00[2]	B010100	B049999	2	. CONTACT,ELEC:0.46 INCH LONG	22526	47350
	131-0608-00[2]	B050000		2	. CONTACT,ELEC:0.365 INCH LONG	22526	47357
-106	136-0183-00	B010100	B049999	5	. SOCKET,PLUG-IN:3 PIN,ROUND	80009	136-0183-00
	136-0183-00	B050000		1	. SOCKET,PLUG-IN:3 PIN,ROUND	80009	136-0183-00
	136-0252-04[1]	B010100	B090000X	12	. CONTACT,ELEC:0.188 INCH LONG	22526	75060
	136-0252-04[2]	B050000	B051123X	12	. CONTACT,ELEC:0.188 INCH LONG	22526	75060
-107	136-0220-00	B010100	B049999	10	. SOCKET,PLUG-IN:3 PIN,SQUARE	71785	133-23-11-034
	136-0220-00	B050000		11	. SOCKET,PLUG-IN:3 PIN,SQUARE	71785	133-23-11-034

[1]D11 only.
[2]D15 only.

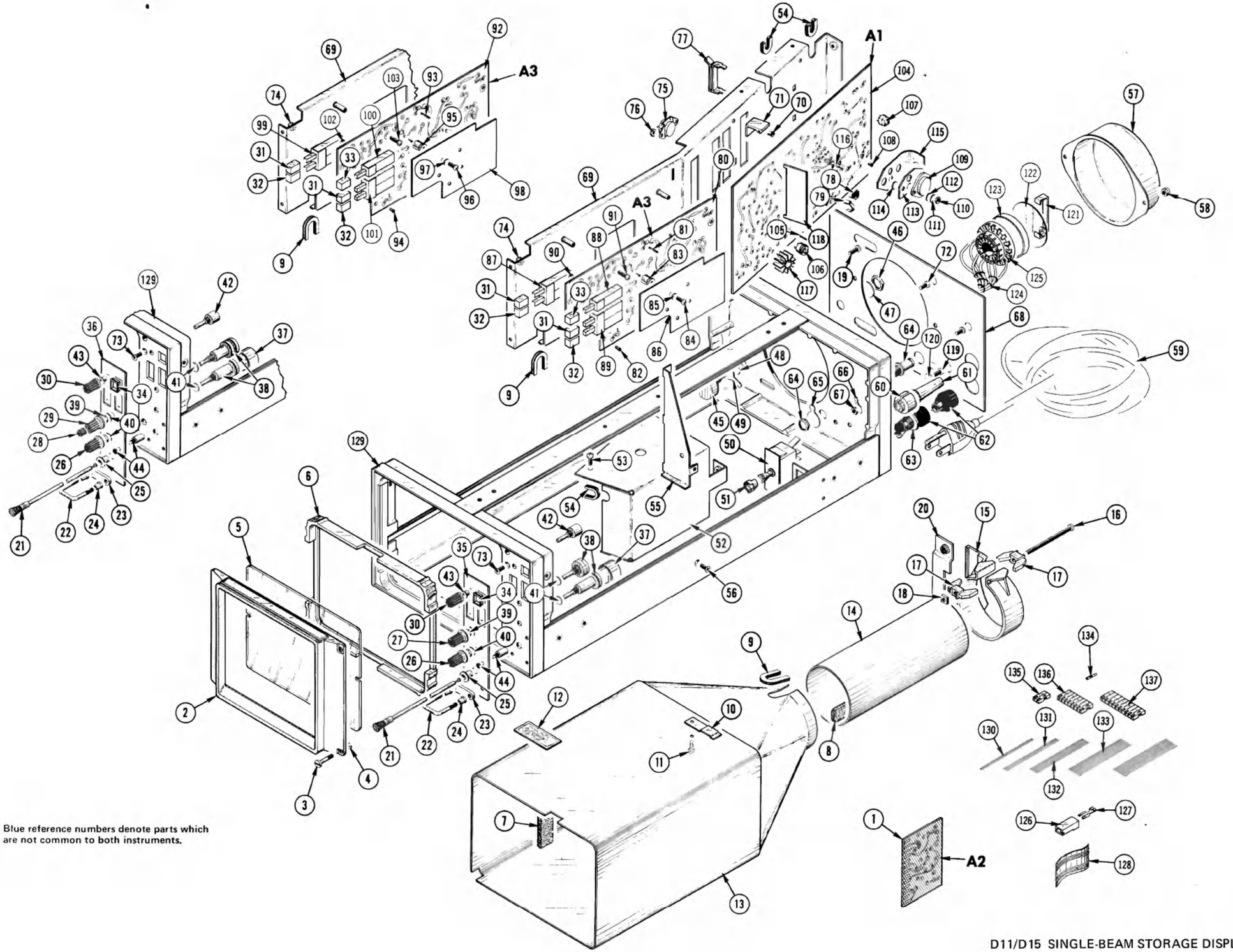

Blue reference numbers denote parts which are not common to both instruments.

Index No.	Tektronix Part No.	Serial/Model No. Eff	Dscont	Qty	1	2	3	4	5	Name & Description	Mfr Code	Mfr Part Number
	070-1133-01			1						MANUAL, INSTRUCTION(NOT SHOWN)	80009	070-1133-01

MANUAL CHANGE INFORMATION

At Tektronix, we continually strive to keep up with latest electronic developments by adding circuit and component improvements to our instruments as soon as they are developed and tested.

Sometimes, due to printing and shipping requirements, we can't get these changes immediately into printed manuals. Hence, your manual may contain new change information on following pages.

A single change may affect several sections. Since the change information sheets are carried in the manual until all changes are permanently entered, some duplication may occur. If no such change pages appear following this page, your manual is correct as printed.

SERVICE NOTE

Because of the universal parts procurement problem, some electrical parts in your instrument may be different from those described in the Replaceable Electrical Parts List. The parts used will in no way alter or compromise the performance or reliability of this instrument. They are installed when necessary to ensure prompt delivery to the customer. Order replacement parts from the Replaceable Electrical Parts List.

CALIBRATION TEST EQUIPMENT REPLACEMENT

Calibration Test Equipment Chart

This chart compares TM 500 product performance to that of older Tektronix equipment. Only those characteristics where significant specification differences occur, are listed. In some cases the new instrument may not be a total functional replacement. Additional support instrumentation may be needed or a change in calibration procedure may be necessary.

Comparison of Main Characteristics

DM 501 replaces 7D13		
PG 501 replaces 107	PG 501 - Risetime less than 3.5 ns into 50 Ω.	107 - Risetime less than 3.0 ns into 50 Ω.
108	PG 501 - 5 V output pulse; 3.5 ns Risetime.	108 - 10 V output pulse; 1 ns Risetime.
111	PG 501 - Risetime less than 3.5 ns; 8 ns Pretrigger pulse delay.	111 - Risetime 0.5 ns; 30 to 250 ns Pretrigger Pulse delay.
114	PG 501 - ±5 V output.	114 - ±10 V output. Short proof output.
115	PG 501 - Does not have Paired, Burst, Gated, or Delayed pulse mode; ±5 V dc Offset. Has ±5 V output.	115 - Paired, Burst, Gated, and Delayed pulse mode; ±10 V output. Short-proof output.
PG 502 replaces 107		
108	PG 502 - 5 V output	108 - 10 V output.
111	PG 502 - Risetime less than 1 ns; 10 ns Pretrigger pulse delay.	111 - Risetime 0.5 ns; 30 to 250 ns Pretrigger pulse delay.
114	PG 502 - ±5 V output	114 - ±10 V output. Short proof output.
115	PG 502 - Does not have Paired, Burst, Gated, Delayed & Undelayed pulse mode; Has ±5 V output.	115 - Paired, Burst, Gated, Delayed & Undelayed pulse mode; ±10 V output. Short-proof output.
2101	PG 502 - Does not have Paired or Delayed pulse. Has ±5 V output.	2101 - Paired and Delayed pulse; 10 V output.
PG 506 replaces 106	PG 506 - Positive-going trigger output signal at least 1 V; High Amplitude output, 60 V.	106 - Positive and Negative-going trigger output signal, 50 ns and 1 V; High Amplitude output, 100 V.
067-0502-01	PG 506 - Does not have chopped feature.	0502-01 - Comparator output can be alternately chopped to a reference voltage.
SG 503 replaces 190, 190A, 190B	SG 503 - Amplitude range 5 mV to 5.5 V p-p.	190B - Amplitude range 40 mV to 10 V p-p.
191	SG 503 - Frequency range 250 kHz to 250 MHz.	191 - Frequency range 350 kHz to 100 MHz.
067-0532-01	SG 503 - Frequency range 250 kHz to 250 MHz.	0532-01 - Frequency range 65 MHz to 500 MHz.
TG 501 replaces 180, 180A	TG 501 - Marker outputs, 5 sec to 1 ns. Sinewave available at 5, 2, and 1 ns. Trigger output - slaved to marker output from 5 sec through 100 ns. One time-mark can be generated at a time.	180A - Marker outputs, 5 sec to 1 μs. Sinewave available at 20, 10, and 2 ns. Trigger pulses 1, 10, 100 Hz; 1, 10, and 100 kHz. Multiple time-marks can be generated simultaneously.
181	TG 501 - Marker outputs, 5 sec to 1 ns. Sinewave available at 5, 2, and 1 ns.	181 - Marker outputs, 1, 10, 100, 1000, and 10,000 μs, plus 10 ns sinewave.
184	TG 501 - Marker outputs, 5 sec to 1 ns. Sinewave available at 5, 2, and 1 ns. Trigger output - slaved to marker output from 5 sec through 100 ns. One time-mark can be generated at a time.	184 - Marker outputs, 5 sec to 2 ns. Sinewave available at 50, 20, 10, 5, and 2 ns. Separate trigger pulses of 1 and .1 sec; 10, 1, and .1 ms; 10 and 1 μs. Marker amplifier provides positive or negative time marks of 25 V min. Marker intervals of 1 and .1 sec; 10, 1, and .1 ms; 10 and 1 μs.
2901	TG 501 - Marker outputs, 5 sec to 1 ns. Sinewave available at 5, 2, and 1 ns. Trigger output - slaved to marker output from 5 sec through 100 ns. One time-mark can be generated at a time.	2901 - Marker outputs, 5 sec to 0.1 μs. Sinewave available to 50, 10, and 5 ns. Separate trigger pulses, from 5 sec to 0.1 μs. Multiple time-marks can be generated simultaneously.

NOTE: All TM 500 generator outputs are short-proof. All TM 500 plug-in instruments require TM 500-Series Power Module.

REV. A, OCT 1975