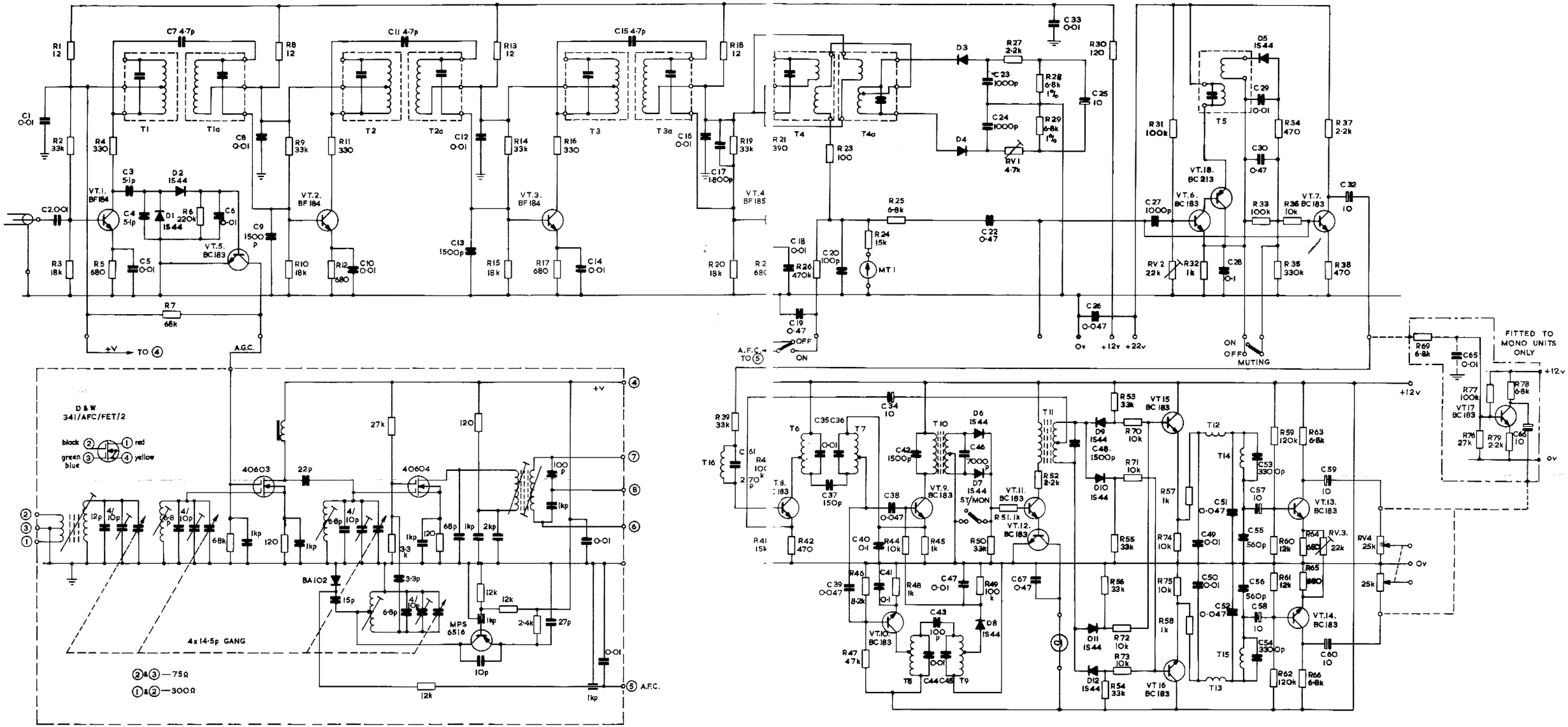

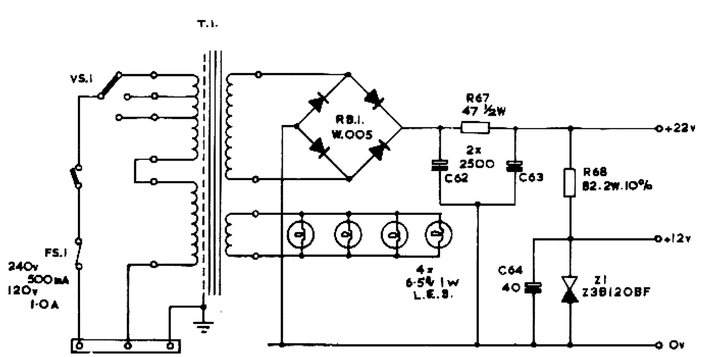

T16 & C61 FITTED TO USA MODELS ONLY

FOR 75μs DE-EMPHASIS
C49 & C50 — 4700p
C51 & C52 — 0·068
MONO VERSION
C65 — 0·015

ALL 'R' VALUES IN OHMS
ALL 'C' VALUES IN MICROFARADS
UNLESS OTHERWISE STATED

ALL RESISTORS 0·25W ±5% UNLESS OTHERWISE STATED