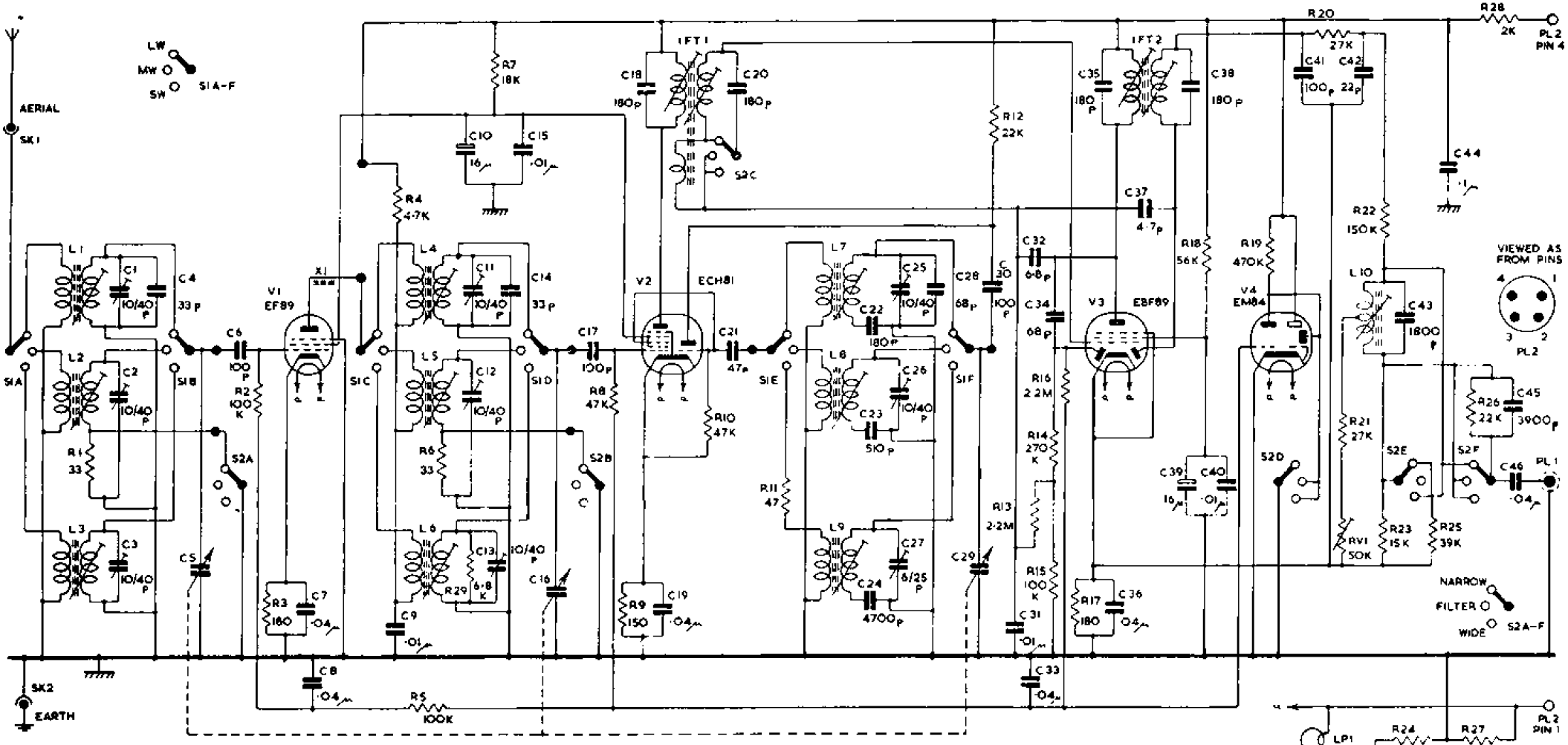

AN ADDITIONAL CONTACT IS FITTED TO THE REAR OF S1B, D & E WHICH EARTHS THE UNUSED TUNED WINDINGS.

EUROPEAN MODEL