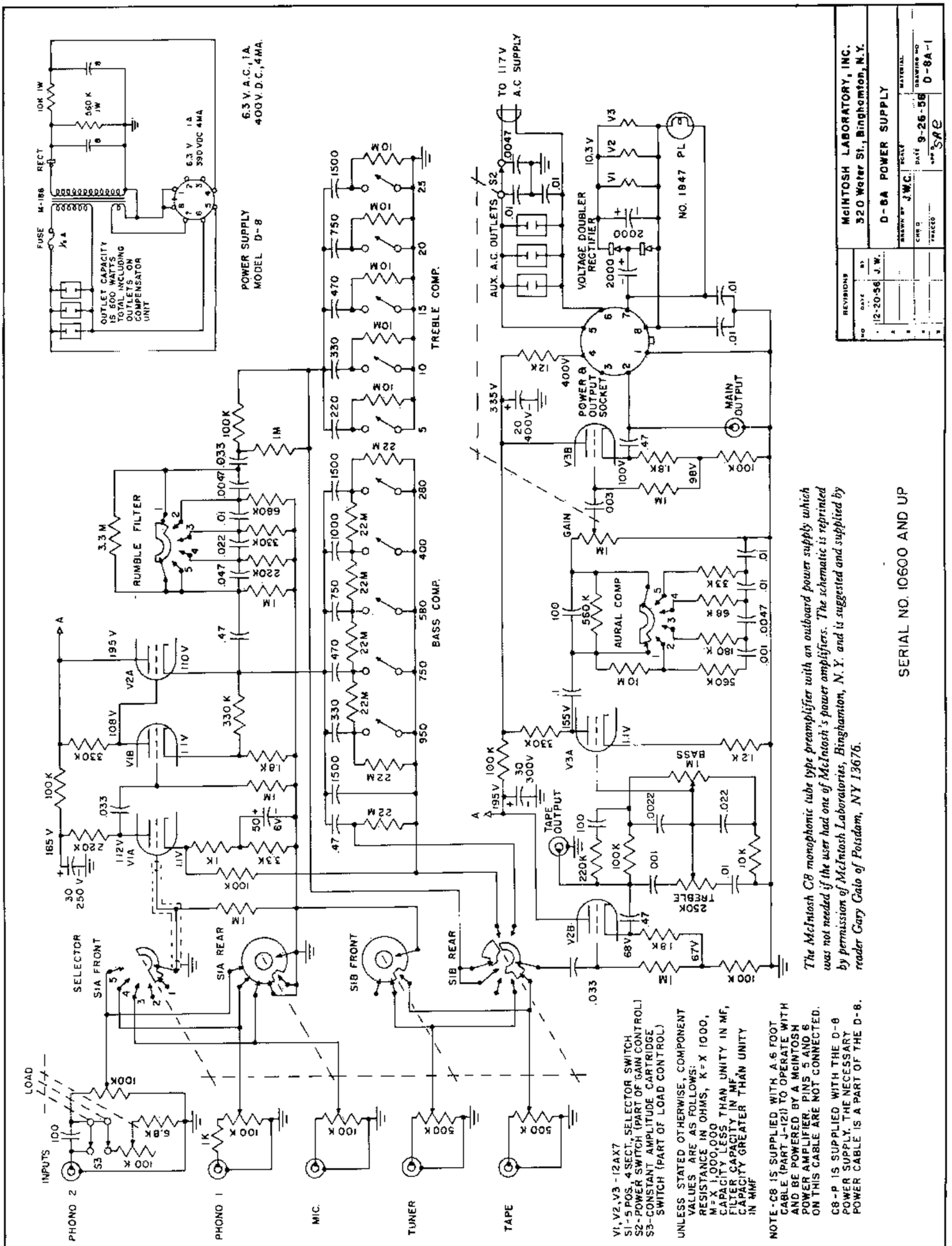

The McIntosh C8 monophonic tube type preamplifier with an outboard power supply which was not needed if the user had one of McIntosh's power amplifiers. The schematic is reprinted by permission of McIntosh Laboratories, Binghamton, N.Y. and is suggested and supplied by reader Gary Galo of Poisdam, NY 13676.

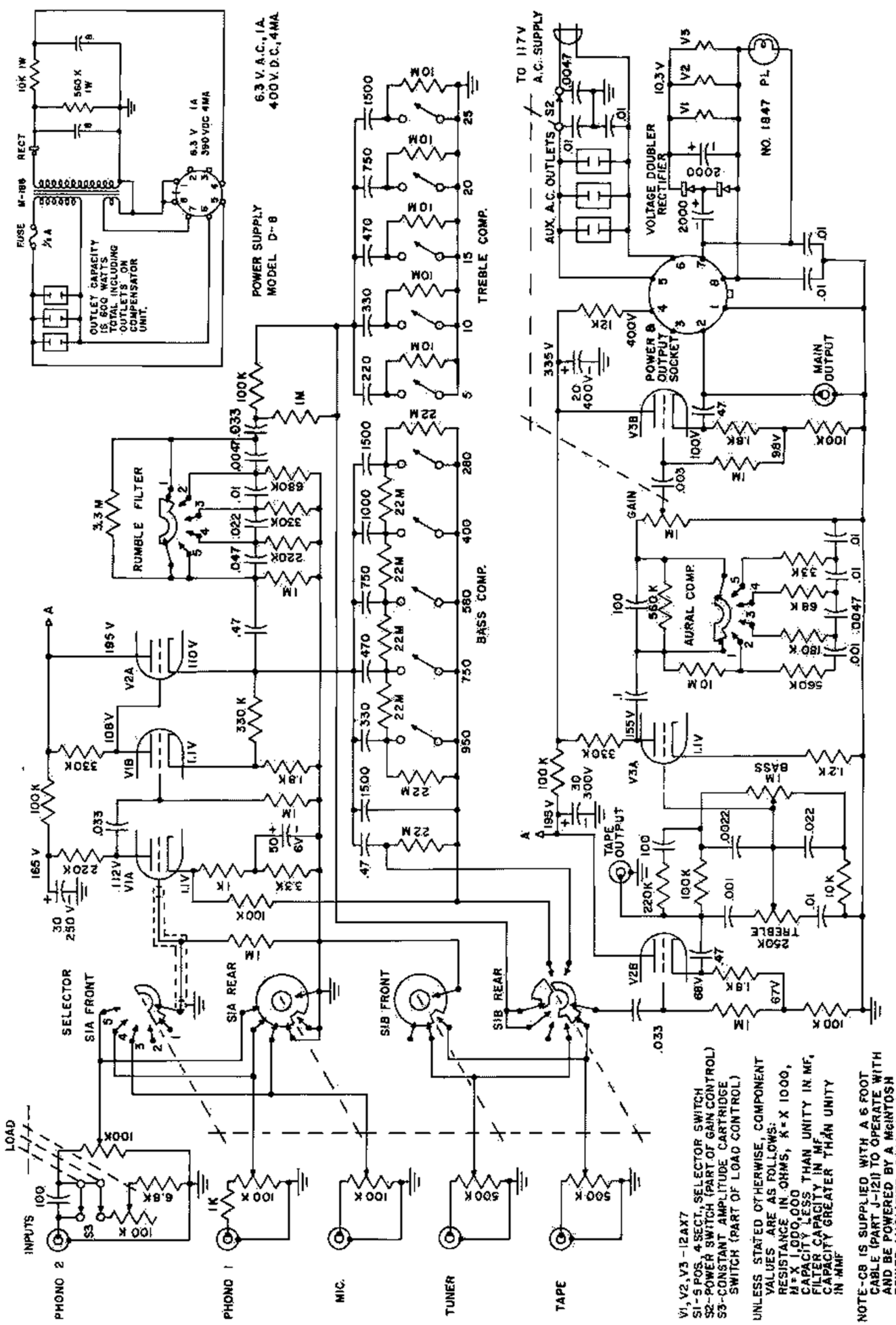

FIGURE 1: Schematic diagram of the unmodified McIntosh C-8 preamplifier (serial number 10600 and up). Drawing courtesy of McIntosh Laboratories.

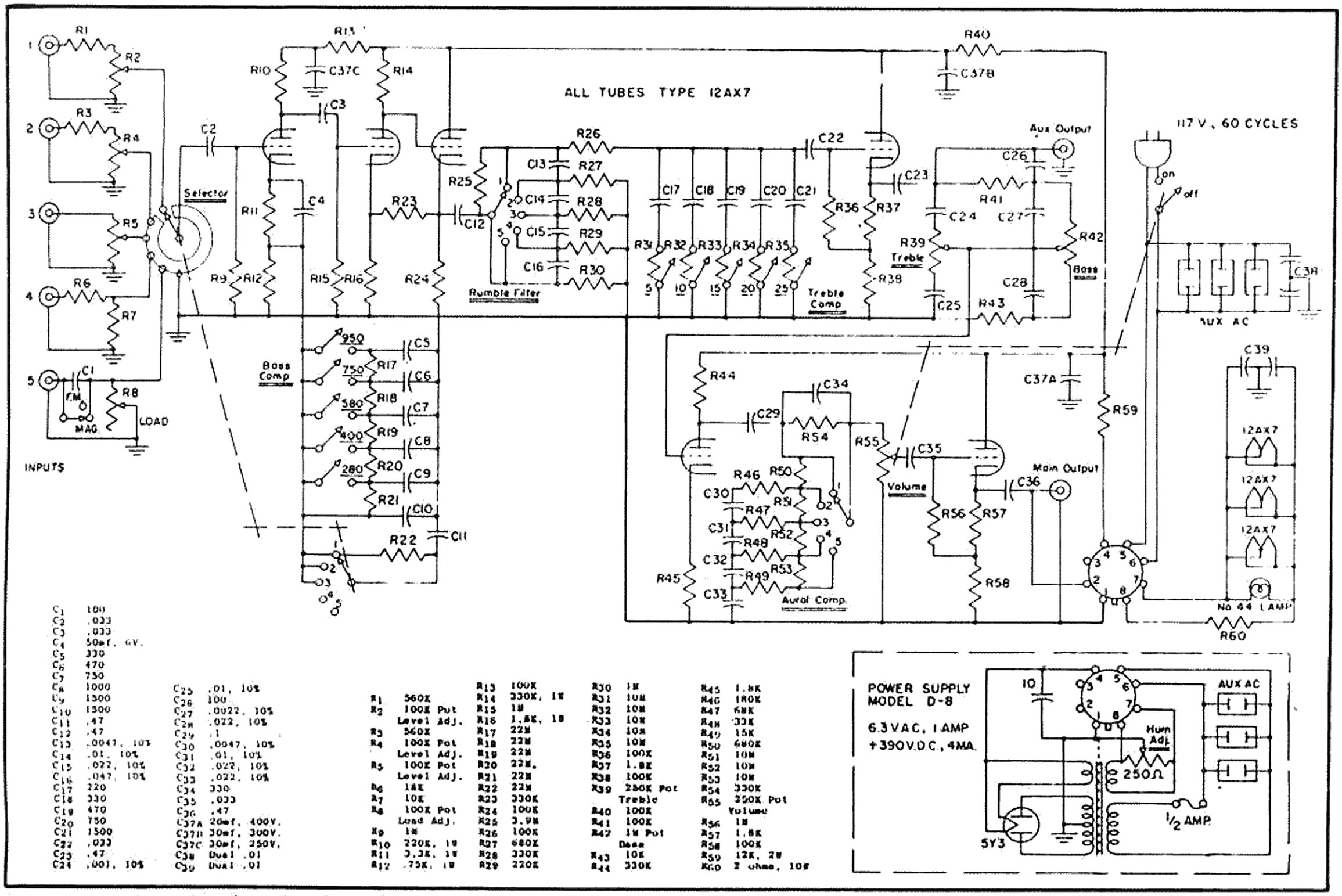

C1	100
C2	.033
C3	.033
C4	50mf. 6V.
C5	330
C6	470
C7	750
C8	1000
C9	1500
C10	1500
C11	.47
C12	.47
C13	.0047, 10%
C14	.01, 10%
C15	.022, 10%
C16	.047, 10%
C17	220
C18	330
C19	470
C20	750
C21	1500
C22	.033
C23	.47
C24	.001, 10%
C25	.01, 10%
C26	100
C27	.0022, 10%
C28	.022, 10%
C29	.1
C30	.0047, 10%
C31	.01, 10%
C32	.022, 10%
C33	.022, 10%
C34	330
C35	.033
C36	.47
C37A	20mf. 400V.
C37B	30mf. 300V.
C37C	30mf. 250V.
C38	Dual .01
C39	Dual .01

R1	560K
R2	100K Pot Level Adj.
R3	560K
R4	100K Pot Level Adj.
R5	100K Pot Level Adj.
R6	18K
R7	10K
R8	100K Pot Load Adj.
R9	1M
R10	220K, 1W
R11	3.3K, 1W
R12	.75K, 1W
R13	100K
R14	330K, 1W
R15	1M
R16	1.8K, 1W
R17	22M
R18	22M
R19	22M
R20	22M.
R21	22M
R22	22M
R23	330K
R24	100K
R25	3.9M
R26	100K
R27	680K
R28	330K
R29	220K
R30	1M
R31	10M
R32	10M
R33	10M
R34	10M
R35	10M
R36	100K
R37	1.8K
R38	100K
R39	250K Pot Treble
R40	100K
R41	100K
R42	1M Pot Bass
R43	10K
R44	330K
R45	1.8K
R46	180K
R47	68K
R48	33K
R49	15K
R50	680K
R51	10M
R52	10M
R53	10M
R54	330K
R55	350K Pot Volume
R56	1M
R57	1.8K
R58	100K
R59	12K, 2W
R60	2 ohms, 10%

FIGURE 1: Schematic of McIntosh Audio Compensator.