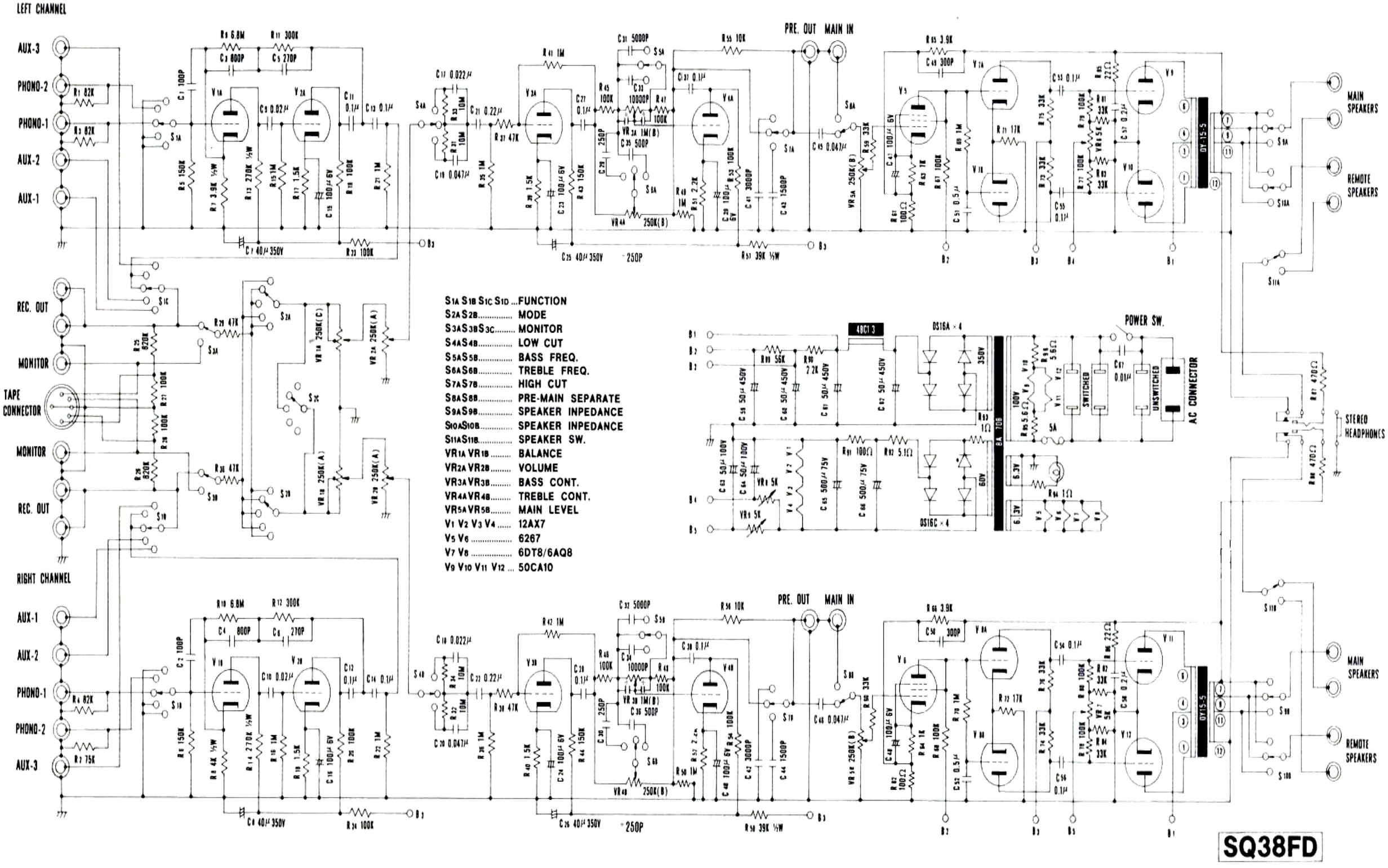
LEFT CHANNEL
AUX-3
PHONO-2
PHONO-1
AUX-2
AUX-1
REC. OUT
MONITOR
TAPE CONNECTOR
MONITOR
REC. OUT
RIGHT CHANNEL
AUX-1
AUX-2
PHONO-1
PHONO-2
AUX-3
PRE. OUT
MAIN IN
MAIN SPEAKERS
REMOTE SPEAKERS
STEREO HEADPHONES
POWER SW.
AC CONNECTOR
SWITCHED
UNSWITCHED
DY-15-5
4BC13
DS16A × 4
DS16C × 4
BA 706
S1A S1B S1C S1D ...FUNCTION
S2A S2B..... MODE
S3A S3B S3C..... MONITOR
S4A S4B..... LOW CUT
S5A S5B..... BASS FREQ.
S6A S6B..... TREBLE FREQ.
S7A S7B..... HIGH CUT
S8A S8B..... PRE-MAIN SEPARATE
S9A S9B..... SPEAKER INPEDANCE
S10A S10B..... SPEAKER INPEDANCE
S11A S11B..... SPEAKER SW.
VR1A VR1B..... BALANCE
VR2A VR2B..... VOLUME
VR3A VR3B..... BASS CONT.
VR4A VR4B..... TREBLE CONT.
VR5A VR5B..... MAIN LEVEL
V1 V2 V3 V4 ..... 12AX7
V5 V6 6267
V7 V8 ..... 6DT8/6AQ8
V9 V10 V11 V12 ... 50CA10
SQ38FD