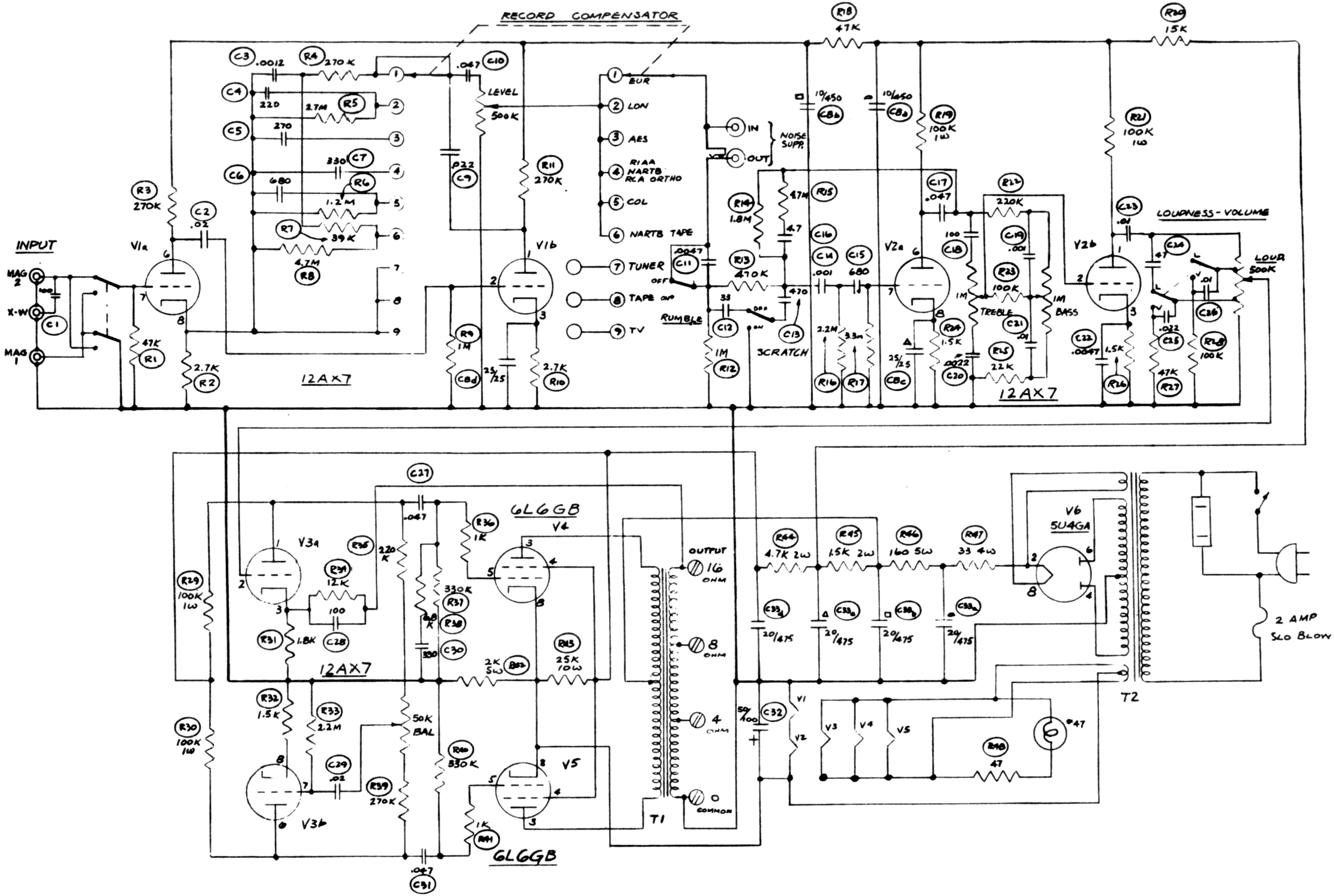
RECORD COMPENSATOR
INPUT
MAG 2
X-W
MAG 1
V1a
12AX7
V1b
12AX7
LEVEL
500K
EUR
LON
AES
RIAA
NARTB
RCA ORTHO
COL
NARTB TAPE
TUNER
TAPE
TV
IN
OUT
NOISE SUPP.
RUMBLE
SCRATCH
V2a
12AX7
V2b
12AX7
TREBLE
BASS
LOUDNESS - VOLUME
LOUD
500K
V3a
V3b
6L6GB
V4
6L6GB
V5
50K
BAL
OUTPUT
16 OHM
8 OHM
4 OHM
0 COMMON
T1
V6
5U4GA
T2
2 AMP
SLO BLOW