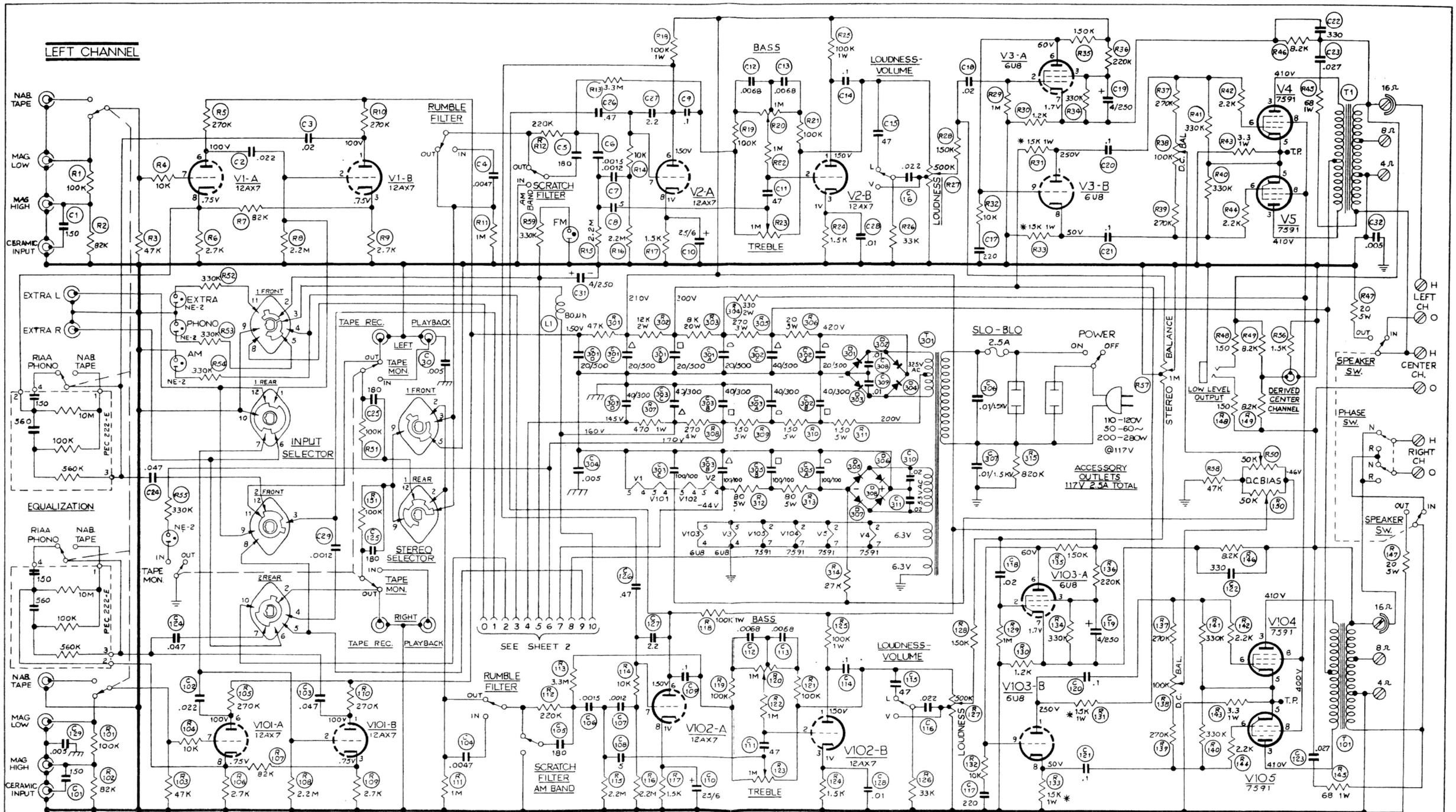

INPUT SELECTOR

POSITION	FUNCTION
1	PHONO
2	FM MONO
3	FM MPX. AUTOMATIC
4	SUB. CH. FILTER
5	AM.
6	EXTRA

STEREO SELECTOR

POSITION	FUNCTION
1	BAL LEFT
2	BAL RIGHT
3	MONO.
4	STEREO
5	REVERSE STEREO
6	LEFT INPUT
7	RIGHT INPUT

THE FOLLOWING CONTROLS IN "LEFT" CHANNEL ARE MECHANICALLY GANGED WITH IDENTICAL CONTROLS IN "RIGHT" CHANNEL:

1 — INPUT SELECTOR
2 — RUMBLE FILTER
3 — BAND WIDE DIST.
4 — COMP.
5 — LOUDNESS
6 — TAPE MONITOR
7 — EQUALIZATION
8 — SPEAKERS

NOTE:

1 SWITCHES SHOWN IN MAX. CCW POSITION
2 ALL RESISTORS ½W UNLESS NOTED
3 ALL VOLTAGES DC ± 15 % MEASURED WITH V.O.M.
4 NO INPUT SIGNAL AND 117 V LINE
5 * MATCHED RESISTORS

HIGHEST SERIES NUMBERS

C32	C129	C311
R59	R151	R315
T1	T101	T301
L1		D308

REVISIONS	1	2
ECO 935 120-64 DR	CHANGE PER 2-19-64 GAL	

SCALE: — | 380 CIRCUIT DIAGRAM | 10-2-63

H. H. SCOTT, INC. MAYNARD, MASS., U.S.A.

DR. GAL | ENG. | DWG. NO. D-380-C1 | SUB. 3

CH. | PROD.

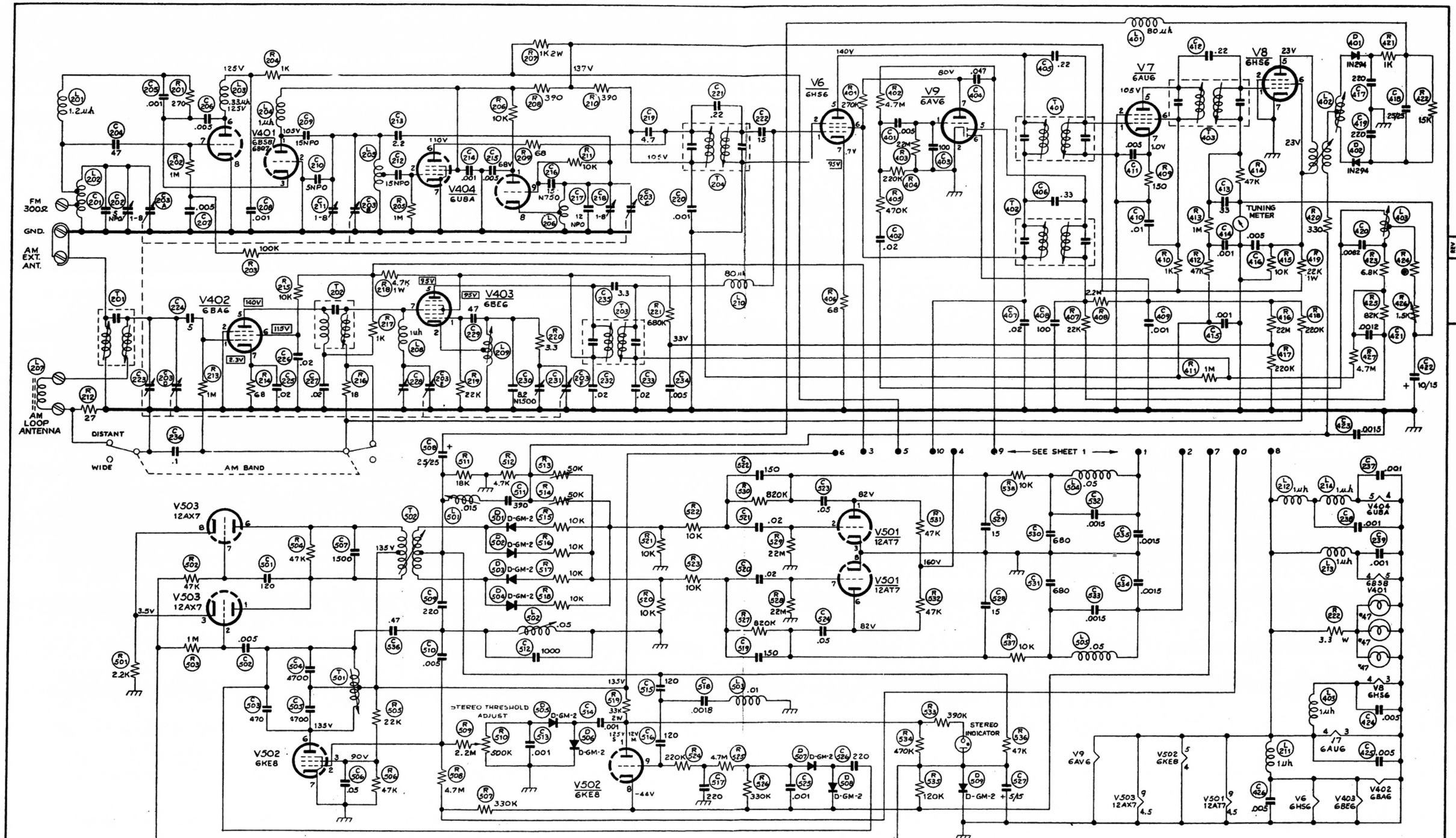

HIGHEST SERIES NUMBERS		
C239	C426	C536
R222	R427	R538
T204	T403	T502
L214	L403	L505
	D402	D509

NOTES:
1. VOLTAGES MEASURED WITH V.O.M. TO CHASSIS.
2. 300Ω LOAD ON ANTENNA TERMINALS.
3. 117 VOLT LINE
4. VOLTAGES SHOWN "BLOCKED IN" (FOR EXAMPLE 83V) ARE VALUES IN AM POSIT. OF TUNER SELEC.
5. TUNER OFF STATION.
6. 2.2K, 2.7K, OR 3.3K.

DATE 5-15-64	H.H.SCOTT, INC. MAYNARD, MASS.	
DRAF. GAL	CIRCUIT DIAGRAM	
CH.		
ENG.	SCALE: —	D-380-C1 REV 3
PROD.	SHEET 2 OF 2	DWG. SIZE D