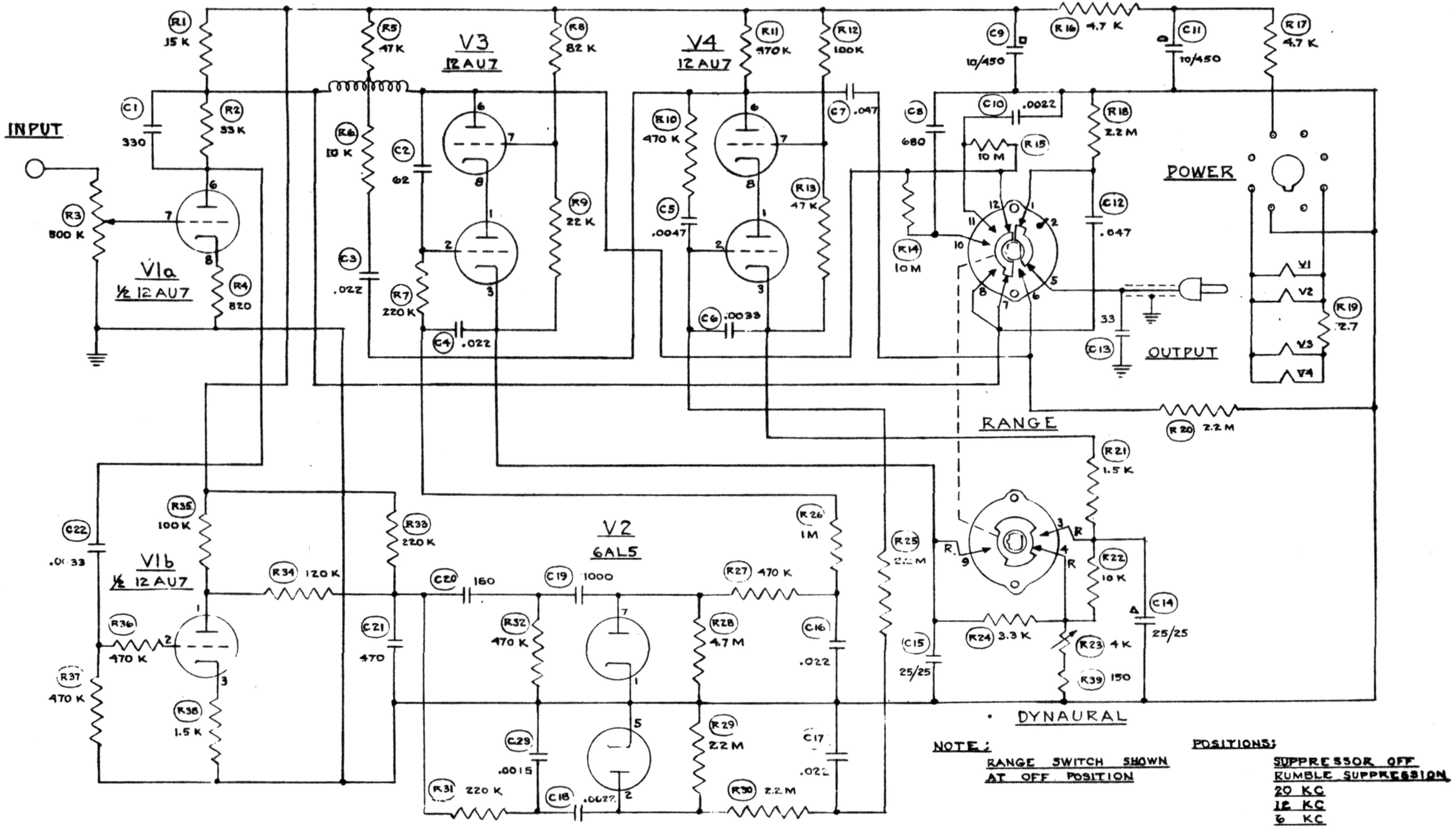

NOTE:
RANGE SWITCH SHOWN AT OFF POSITION

POSITIONS:
SUPPRESSOR OFF
RUMBLE SUPPRESSION
20 KC
12 KC
6 KC

114-A *DYNAURAL* NOISE SUPPRESSOR

CIRCUIT DIAGRAM