FIG. 12 LINE AMPLIFIER MODULE HD250 & ZD22

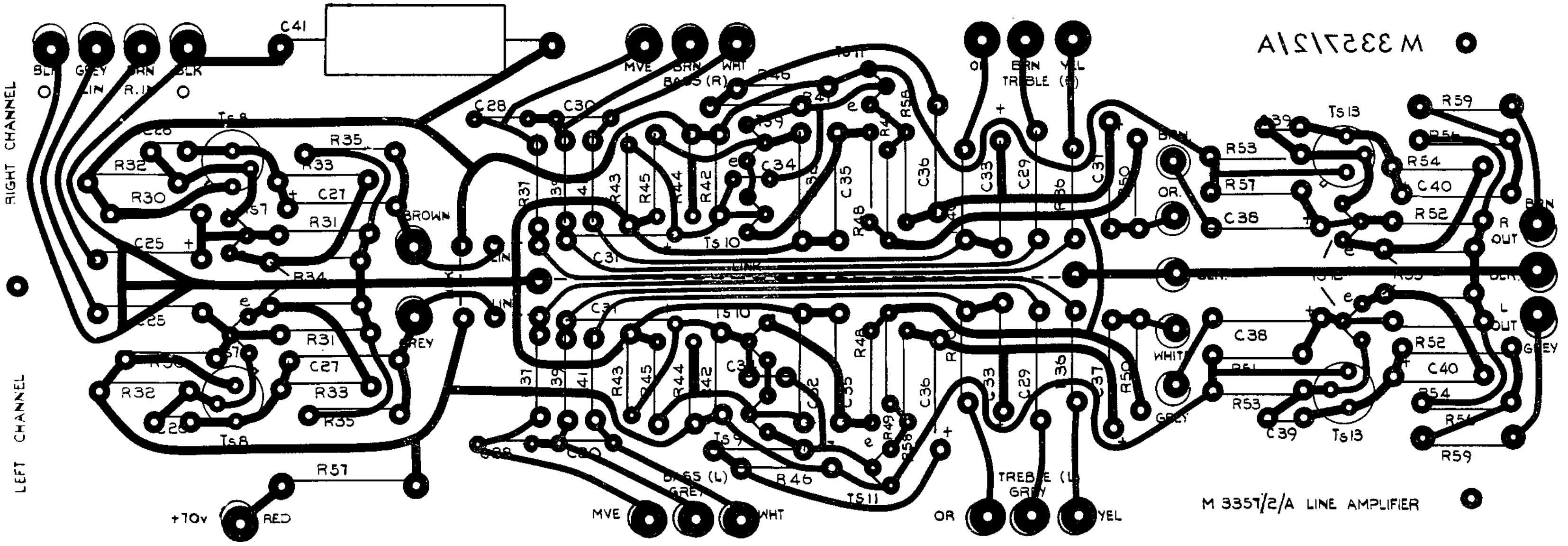

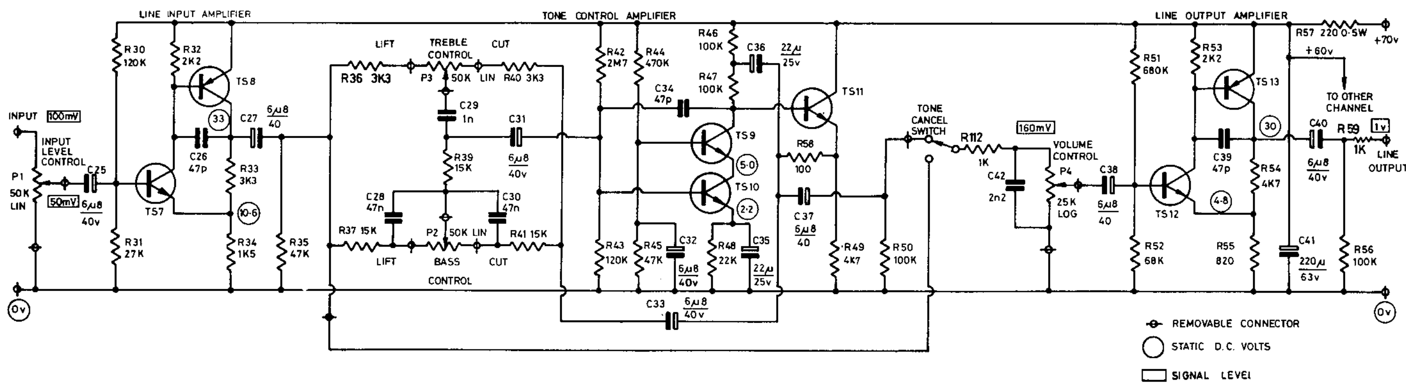

R30	CF	0.25w	120k	5%
R31	CF	0.25w	27k	5%
R32	CF	0.25w	2k2	5%
R33	CF	0.25w	3k3	5%
R34	CF	0.25w	1k5	5%
R35	CF	0.25w	47k	5%
R36	CF	0.25w	3k3	5%
R37	CF	0.25w	15k	5%
R39	CF	0.25w	15k	5%
R40	CF	0.25w	3k3	5%
R41	CF	0.25w	15k	5%
R42	CF	0.25w	2M7	10%
R43	CF	0.25w	120k	5%
R44	CF	0.25w	470k	5%

R45	CF	0.25w	47k	5%
R46	CF	0.25w	100k	5%
R47	CF	0.25w	100k	5%
R48	CF	0.25w	22k	5%
R49	CF	0.25w	4k7	5%
R50	CF	0.25w	100k	5%
R51	CF	0.25w	680k	5%
R52	CF	0.25w	68k	5%
R53	CF	0.25w	2k2	5%
R54	CF	0.25w	4k7	5%
R55	CF	0.25w	820E	5%
R56	CF	0.25w	100k	5%
R57	CF	0.5w	220E	5%
R58	CF	0.25w	100E	5%
R59	CF	0.25w	1k	5%

C25	E	6.8μF	40V	
C26	CR	47pF	63V	
C27	E	6.8μF	40V	
C28	PR	0.047μF	100V	2%
C29	PR	1000pF	400V	5%
C30	PR	0.047μF	100V	2%
C31	E	6.8μF	40V	
C32	E	6.8μF	40V	
C33	E	6.8μF	40V	
C34	CR	47pF	63V	
C35	E	22μF	25V	
C36	E	22μF	25V	
C37	E	6.8μF	40V	
C38	E	6.8μF	40V	

C39	CR	47pF	63V
C40	E	6.8μF	40V
C41	E	220μF	63V

TS7	ZTX107B
TS8	ZN2905A
TS9	ZTX107B
TS10	ZTX107B
TS11	ZTX107B
TS12	ZTX107B
TS13	2N2905A