McIntosh

MA 5100

SERVICE INFORMATION

FROM SERIAL NO. 10H01 TO 20H99

MA 5100

McINTOSH LABORATORY INC. 2 CHAMBERS STREET BINGHAMTON, NEW YORK

www.hifiengine.com

ELECTRICAL SPECIFICATIONS

Power Output:

90 watts RMS continuous, 45 watts per channel operating simultaneously into 4 ohm or 8 ohm loads.

60 watts RMS continuous, 30 watts per channel operating simultaneously into 16 ohm loads.

Harmonic Distortion:

Less than 0.25% at rated power output from 20Hz to 20,000Hz with both channels operating.

Intermodulation Distortion:

Less than 0.25% for any combination of frequencies from 20Hz to 20,000Hz if instantaneous peak power is 90 watts per channel or less into 4 or 8 ohm loads and 60 watts per channel or less into 16 ohm loads with both channels operating.

Frequency Range:

At rated output both channels: ±0.5dB 20Hz through 20,000Hz.

Output Impedance:

4 ohm, 8 ohm, 16 ohm. No impedance switching required.

Internal Impedance/Damping:

Less than .04 ohms; damping factor greater than 100.

Input Sensitivity And Impedance:

Auxiliary, Tape, Tuner, and Tape Monitor: 300mV, 250K ohms.
Phono 1 and Phono 2: 2mV, 47,000 ohms.
Tape Head: 2mV, 1/2 megohm.

Hum And Noise:

High Level Inputs: 75dB below rated output.
Low Level Inputs: 70dB below 10mV input.
Power Amplifier: 90dB below rated output.

Tape Output:

300mV at rated sensitivity, 1.4 volts with 10mV at phono input.

Left Plus Right Output:

Adjustable 0 to 6 volts from generator impedance of less than 5,000 ohms.

Bass Controls:

±18dB at 20Hz.

Treble Controls:

±18dB at 20,000Hz.

HF Filter:

Flat, or 5,000Hz cutoff.

LF Filter:

Flat, or 50Hz cutoff.

Power Requirements:

117 volts AC, 50-60Hz, 70 watts at zero signal output, 200 watts at rated output.

www.hifiengine.com

PREAMP. SECTION PRINTED CIRCUIT BOARD 043-673

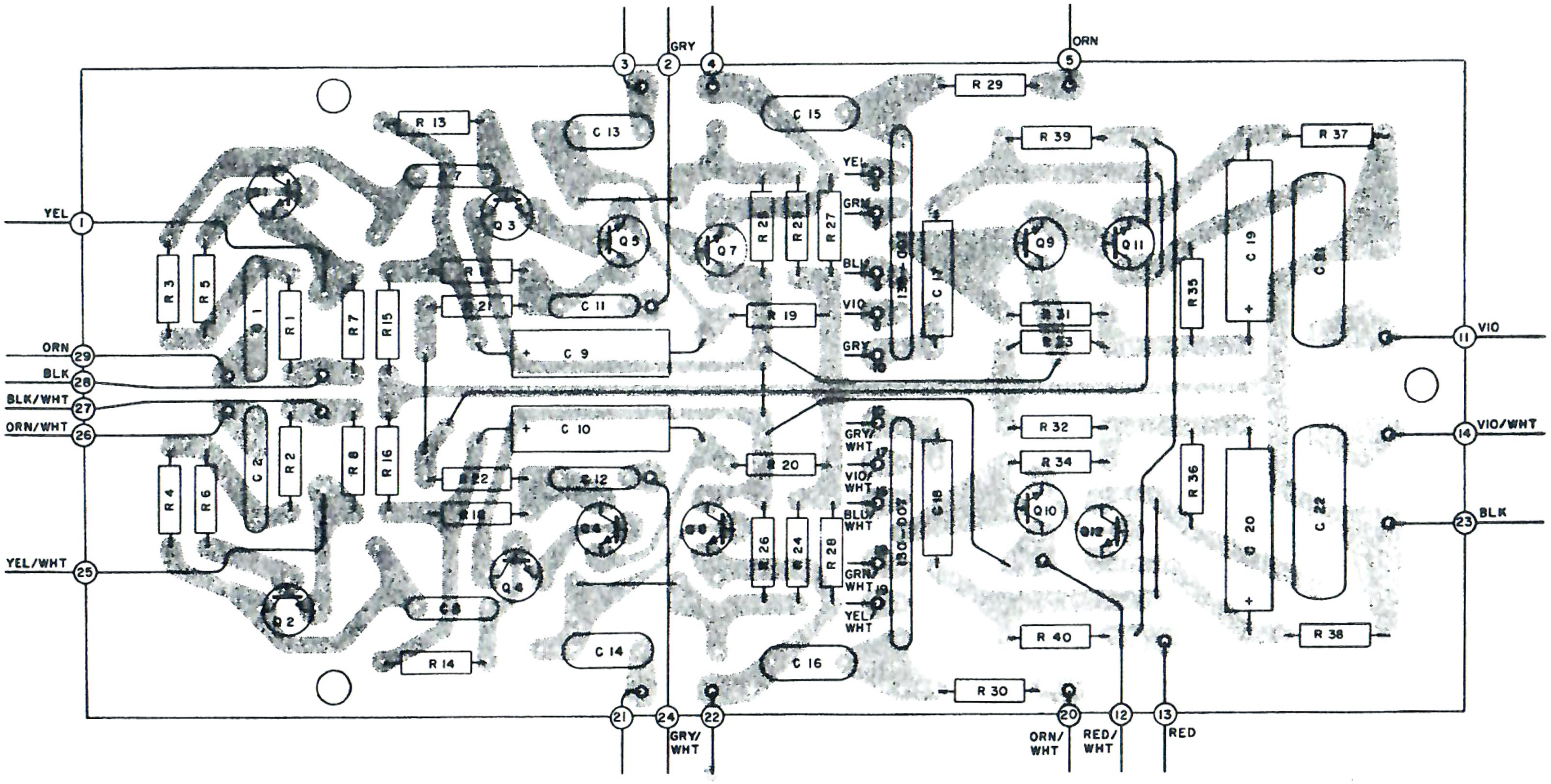

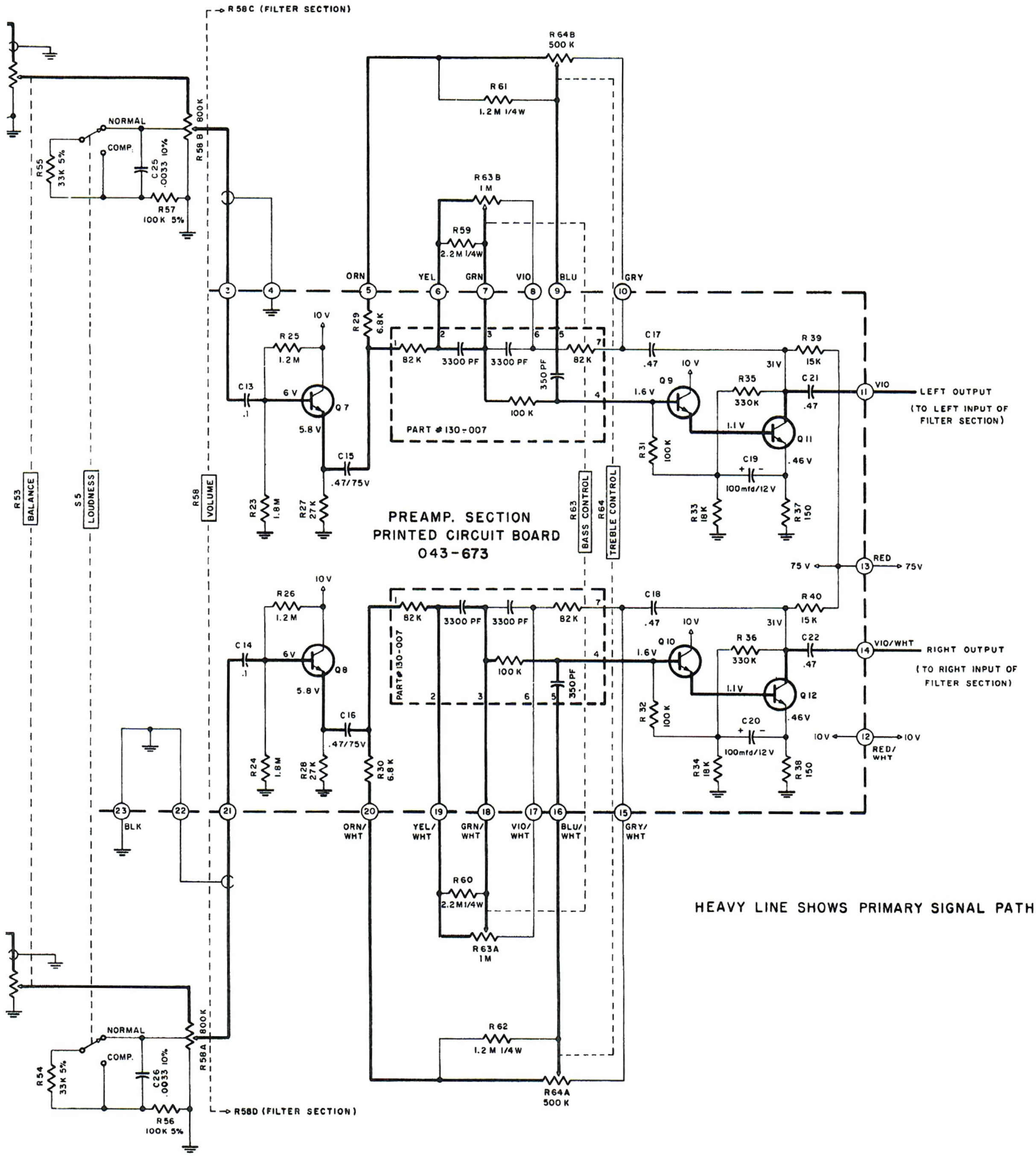

HEAVY LINE SHOWS PRIMARY SIGNAL PATH

PREAMP. SECTION

MA 5100 154 -330

www.hifiengine.com

FILTER SECTION PRINTED CIRCUIT BOARD 043-722

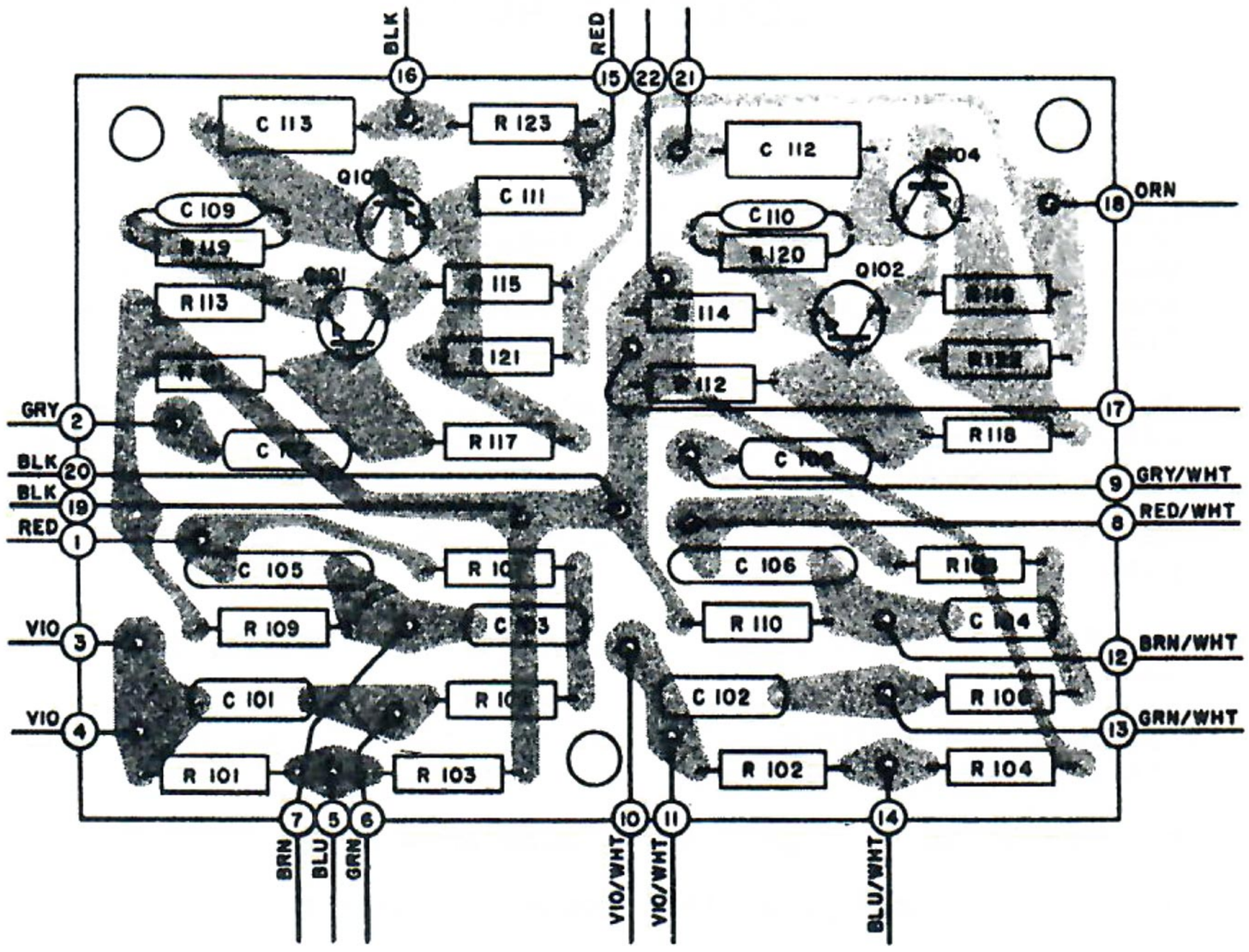

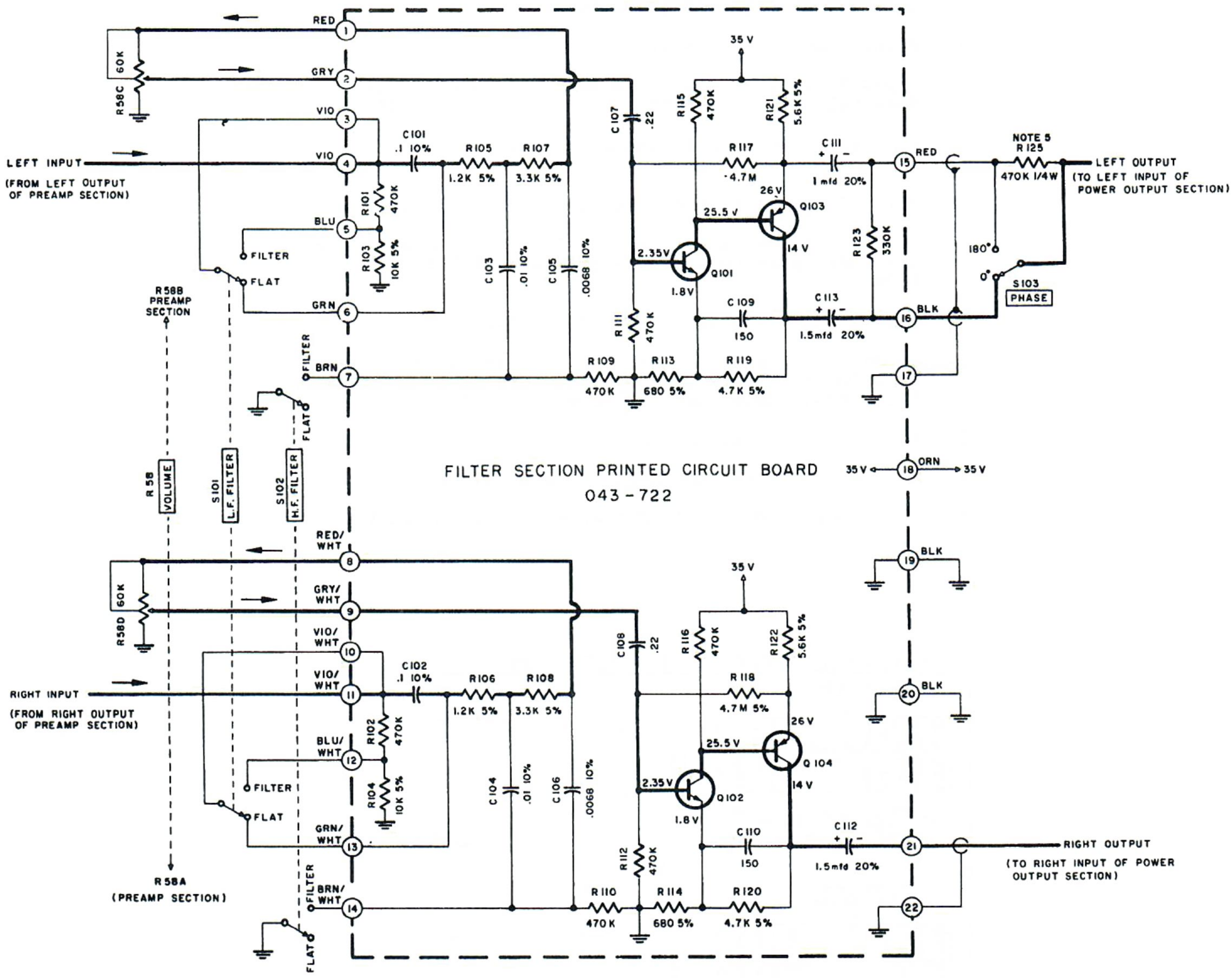

FILTER SECTION

MA 5100 154-332

SCHEMATIC NOTES

Unless otherwise specified: Resistance values are in ohms, 1/2 watt, and 10% tolerance; capacitance values smaller than 1 are in microfarads (mfd); capacitance values greater than 1 are in picofarads (pF); inductors are in microhenries (μH).

Printed circuit board components are outlined on the schematics by dotted lines. The circled numbers on the dotted lines correspond to the numbers on the PC board layouts.

The heavy lines on the schematics denote the primary signal path.

The terminal numbering of rotary switches is for reference only.

All voltages indicated on the schematics are measured under the following conditions:

a. Use of an 11 megohm input impedance VTVM.

b. All voltages ±10% with respect to chassis ground.

c. No signal at input terminals.

d. AC input at 117 volts, 50/60Hz.

e. Front panel controls at:

Input Selector	AUX	Volume	MAX
Mode Selector	STEREO	Power	ON

All other controls in normal position.

1. C219, C220, C221, and C222 were .0015μF in earlier units.

2. In units below 21H00: R237, R238, R239, and R240 were .33 ohms (part number 139-036); and R227 & R228 were 1.5K, 1/2W.

3. C231 & C232 were 100pF in early units.

4. In units below 13H00: C227 & C228 were 47pF; C201 & C202 were 100pF; C209 & C210 were .001μF; R256 & R257 were used; R233, R234, R235, and R236 are not used.

5. R125 was not used in early units.

6. C205 & C206 were not used in early units.

7. R243, R244, R245, and R246 were 47 ohms in early units.

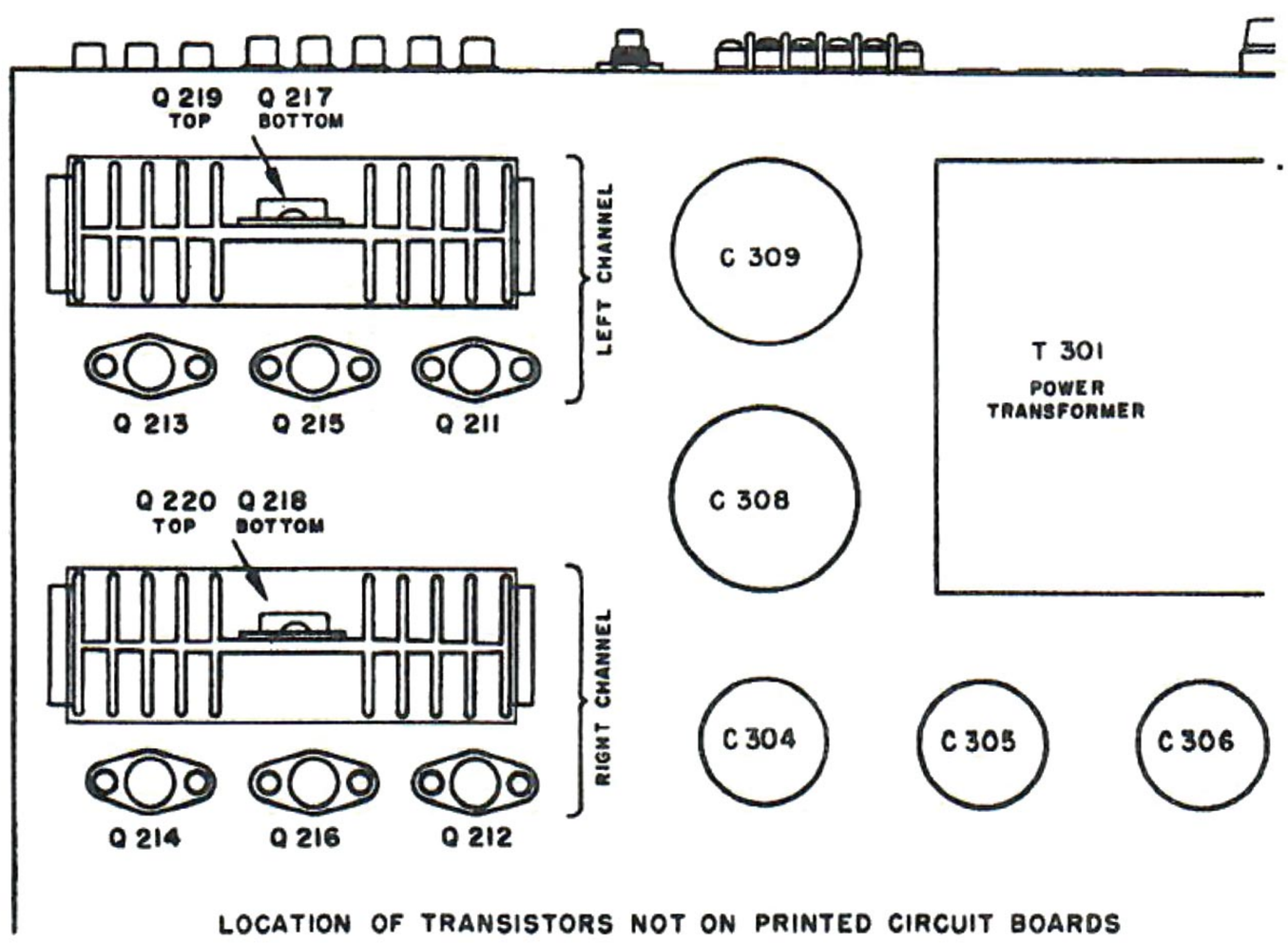

LOCATION OF TRANSISTORS NOT ON PRINTED CIRCUIT BOARDS

www.hifiengine.com

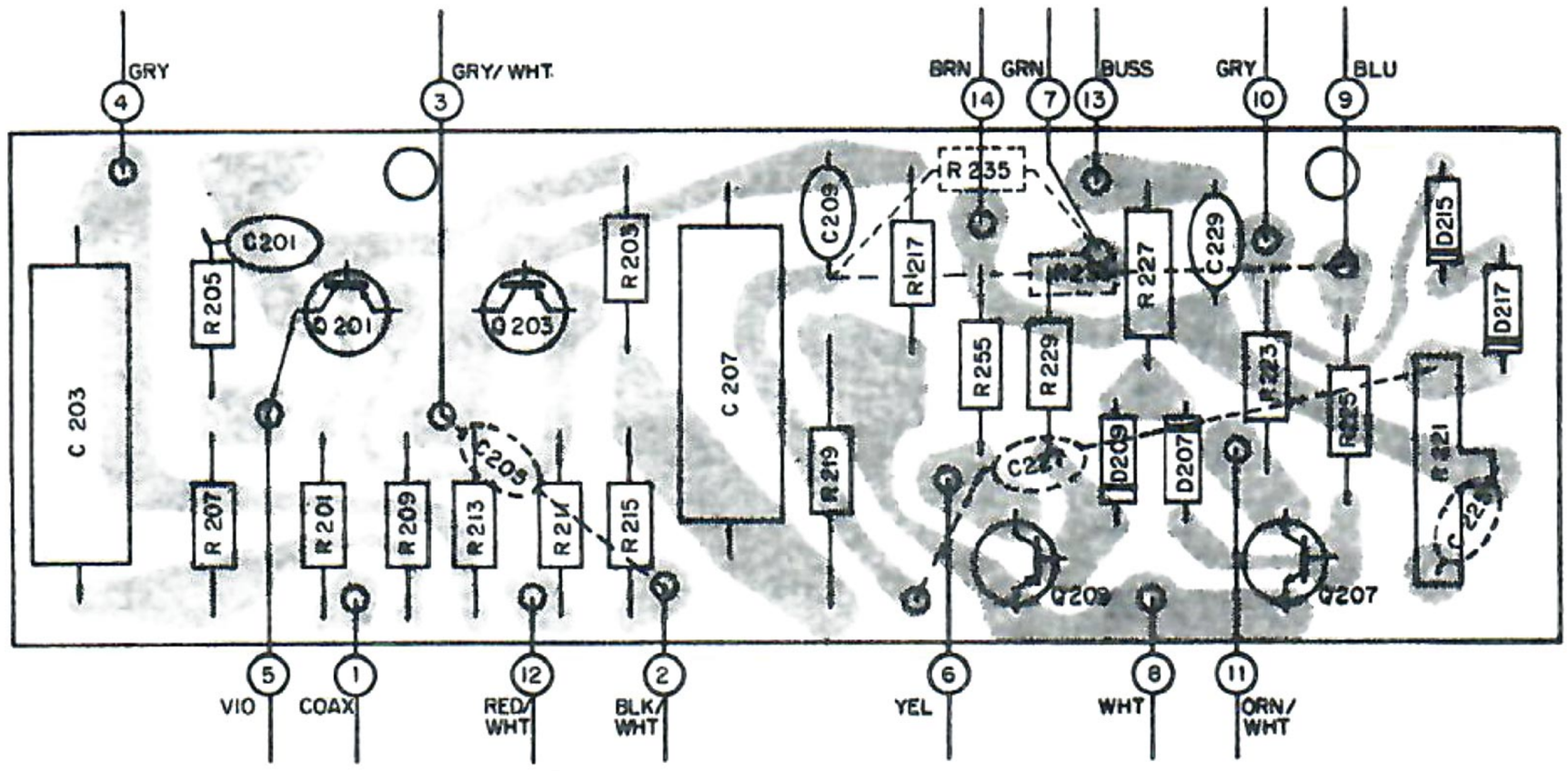

LEFT CHANNEL POWER OUTPUT PRINTED CIRCUIT BOARD 043-918

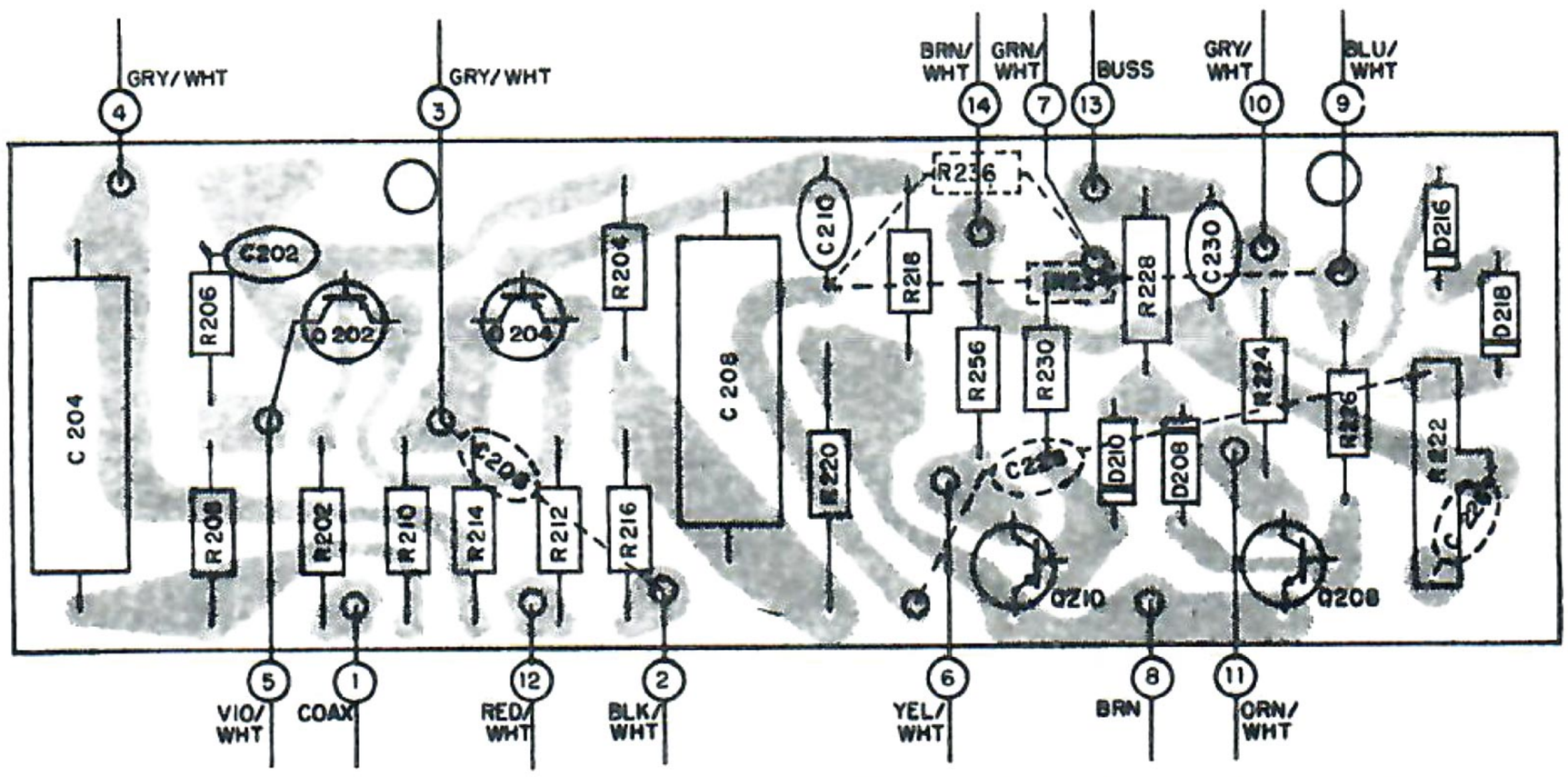

RIGHT CHANNEL POWER OUTPUT PRINTED CIRCUIT BOARD 043-918

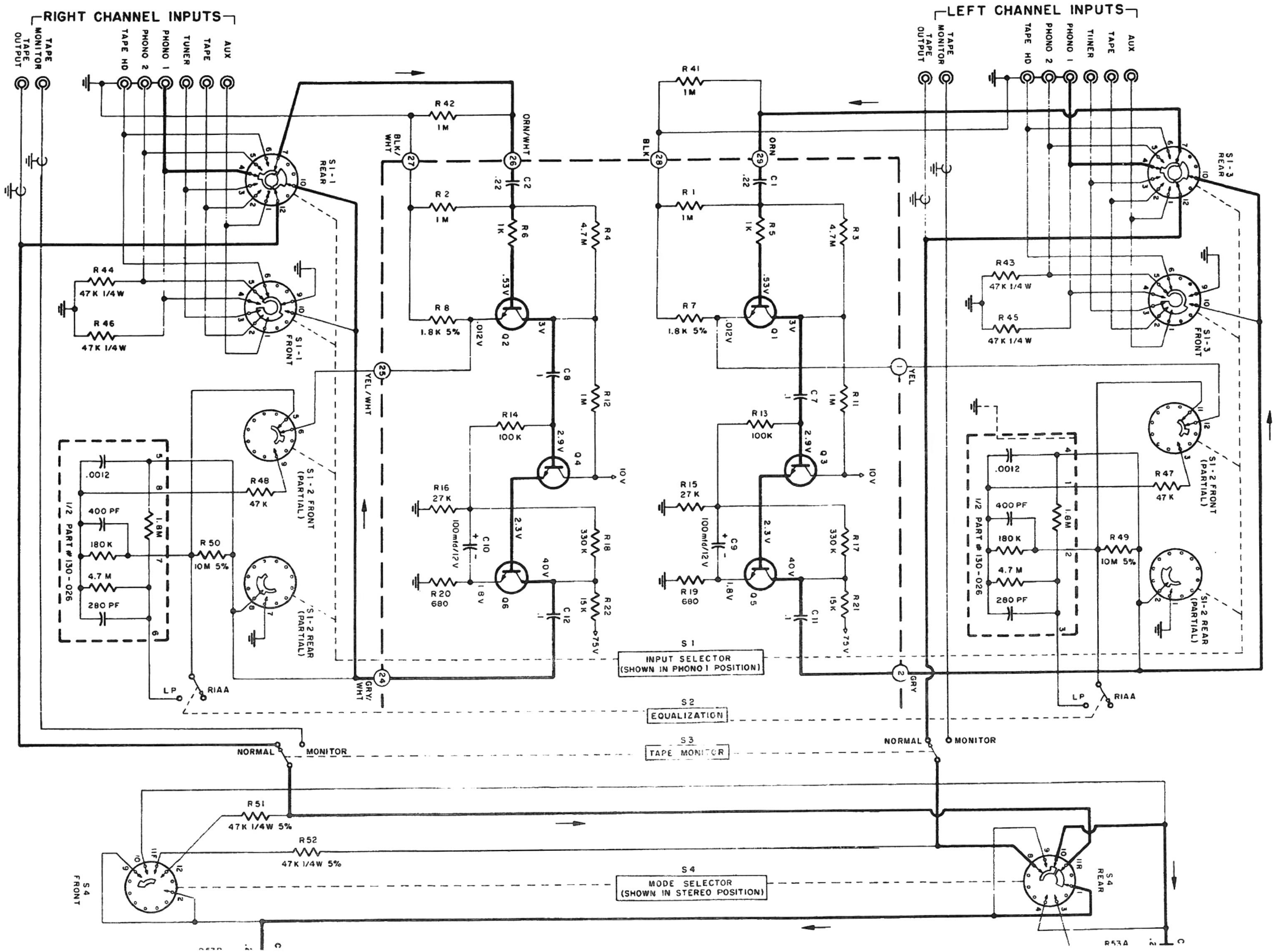
RIGHT CHANNEL INPUTS
LEFT CHANNEL INPUTS
TAPE OUTPUT
TAPE MONITOR
TAPE HD
PHONO 2
PHONO 1
TUNER
TAPE
AUX
S1-1 REAR
S1-1 FRONT
S1-2 FRONT (PARTIAL)
S1-2 REAR (PARTIAL)
S1-3 REAR
S1-3 FRONT
1/2 PART # 130-026
S1
INPUT SELECTOR (SHOWN IN PHONO 1 POSITION)
S2
EQUALIZATION
S3
TAPE MONITOR
S4
MODE SELECTOR (SHOWN IN STEREO POSITION)
S4 FRONT
S4 REAR
NORMAL
MONITOR
LP
RIAA
Q1
Q2
Q3
Q4
Q5
Q6
R41 1M
R42 1M
R1 1M
R2 1M
R3 4.7M
R4 4.7M
R5 1K
R6 1K
R7 1.8K 5%
R8 1.8K 5%
R11 1M
R12 1M
R13 100K
R14 100K
R15 27K
R16 27K
R17 330K
R18 330K
R19 680
R20 680
R21 15K
R22 15K
R43 47K 1/4W
R44 47K 1/4W
R45 47K 1/4W
R46 47K 1/4W
R47 47K
R48 47K
R49 10M 5%
R50 10M 5%
R51 47K 1/4W 5%
R52 47K 1/4W 5%
C1 .22
C2 .22
C7 .1
C8 1
C9 100mfd/12V
C10 100mfd/12V
C11 .1
C12 .1
.0012
400 PF
180K
4.7M
280 PF
1.8M
ORN
ORN/WHT
BLK
BLK/WHT
YEL
YEL/WHT
GRY
GRY/WHT
.53V
.012V
3V
2.9V
10V
2.3V
40V
1.8V
75V

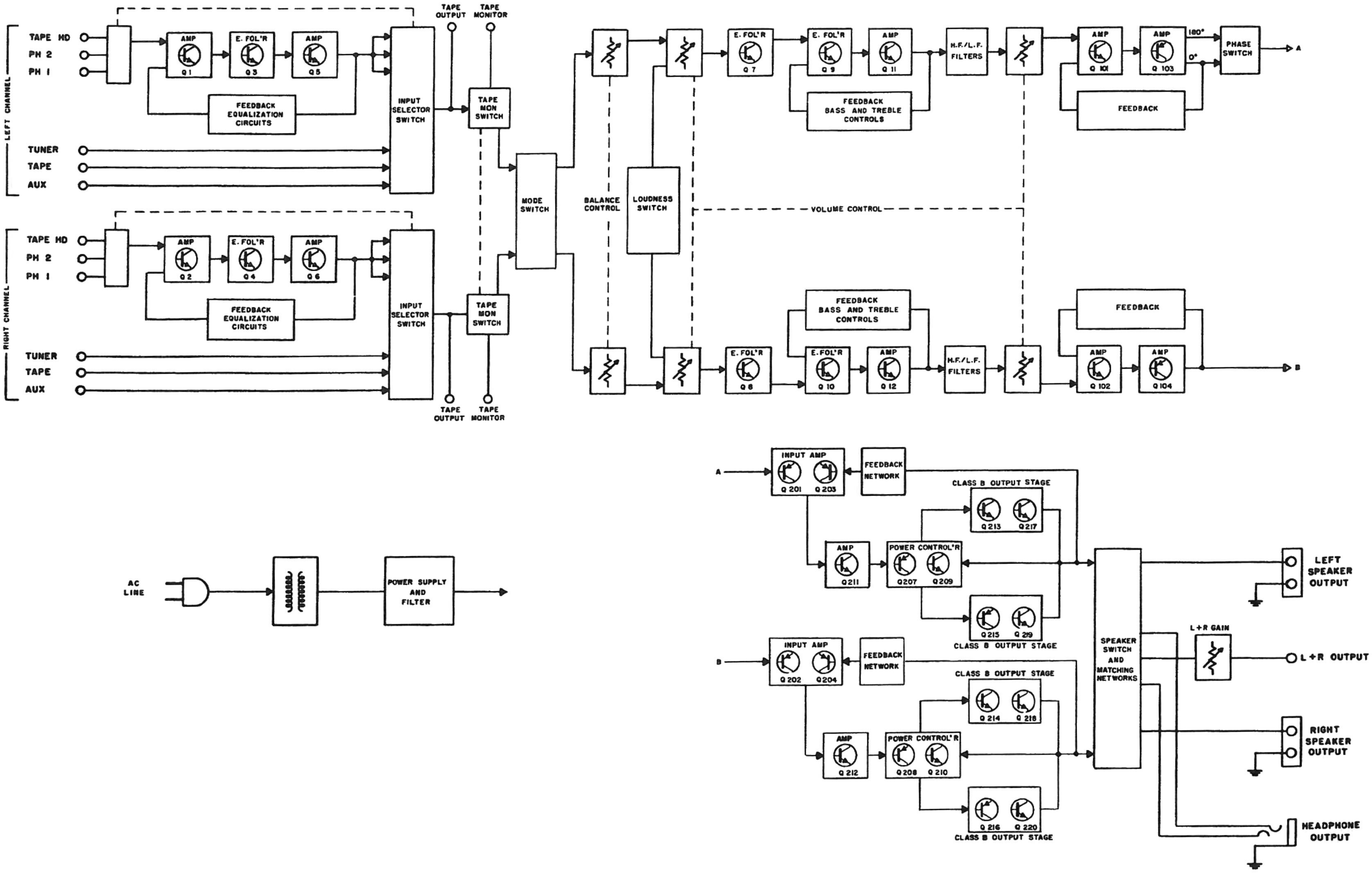

MA 5100 BLOCK DIAGRAM

R64	Treble control (w/knurled shaft)			134-163
R221,222	Bias adjust			134-170
R247	L & R adjust			134-063

RESISTORS

R231,232	Wirewound	3.6K	5W	139-013
R237,238	Wirewound	.47 ohms	5W	139-050
R239,240	Wirewound	.47 ohms	5W	139-050
R250,251	Wirewound	220 ohms	5W	139-009
R301	Wirewound	100 ohms	5W	139-008
R302,303	Wirewound	220 ohms	5W	139-009
R307	Wirewound	100 ohms	5W	139-008
R308	Wirewound	220 ohms	5W	139-009
R311	Wirewound	7.5 ohms	5W	139-010
R312	Wirewound	500 ohms	5W	139-011
R313	Wirewound	220 ohms	5W	139-009

SWITCHES

S1	Input selector switch	146-035
S2	Compensation switch	148-006
S3	Tape monitor switch	148-012
S4	Mode selector switch	146-105
S5	Loudness switch	148-006
S101	LF switch	148-006
S102	HF switch	148-006
S103	Phase switch	148-006
S201	Speaker switch	148-012
S301	Power switch	148-005
S302	Thermal cut out	153-007
S303	Thermal cut out	153-007

TRANSFORMERS

T301	Power transformer	159-069

MODULES

Tone control module	130-007
Compensation module	130-026

FRONT PANEL AND TRIM

Front panel	043-725
Front panel end cap (right)	018-043
Front panel end cap (left)	018-044
Volume control knob	043-253
Balance control knob	043-253
Input control knob	043-253
Mode selector knob	043-253
Treble knob (rear)	090-009
Treble knob (front) - for flat shaft	043-625
Treble knob (front) - for knurled shaft	090-008
Bass knob (rear)	090-009
Bass knob (front) - for flat shaft	043-625
Bass knob (front) - for knurled shaft	090-008

LAMPS

Panel illumination #1864	058-028
Switch indicator #334	058-003

MOUNTING SYSTEM

Shelf bracket (right)	043-234
Shelf bracket (left)	043-235
Mounting template #100	038-179
Hardware package	043-557

MISCELLANEOUS ITEMS

Plastic feet	017-041
Shipping carton	043-727
Owners manual	038-129
Line cord	170-021
Shorting plug	127-001
Fuseholder	178-001

www.hifiengine.com