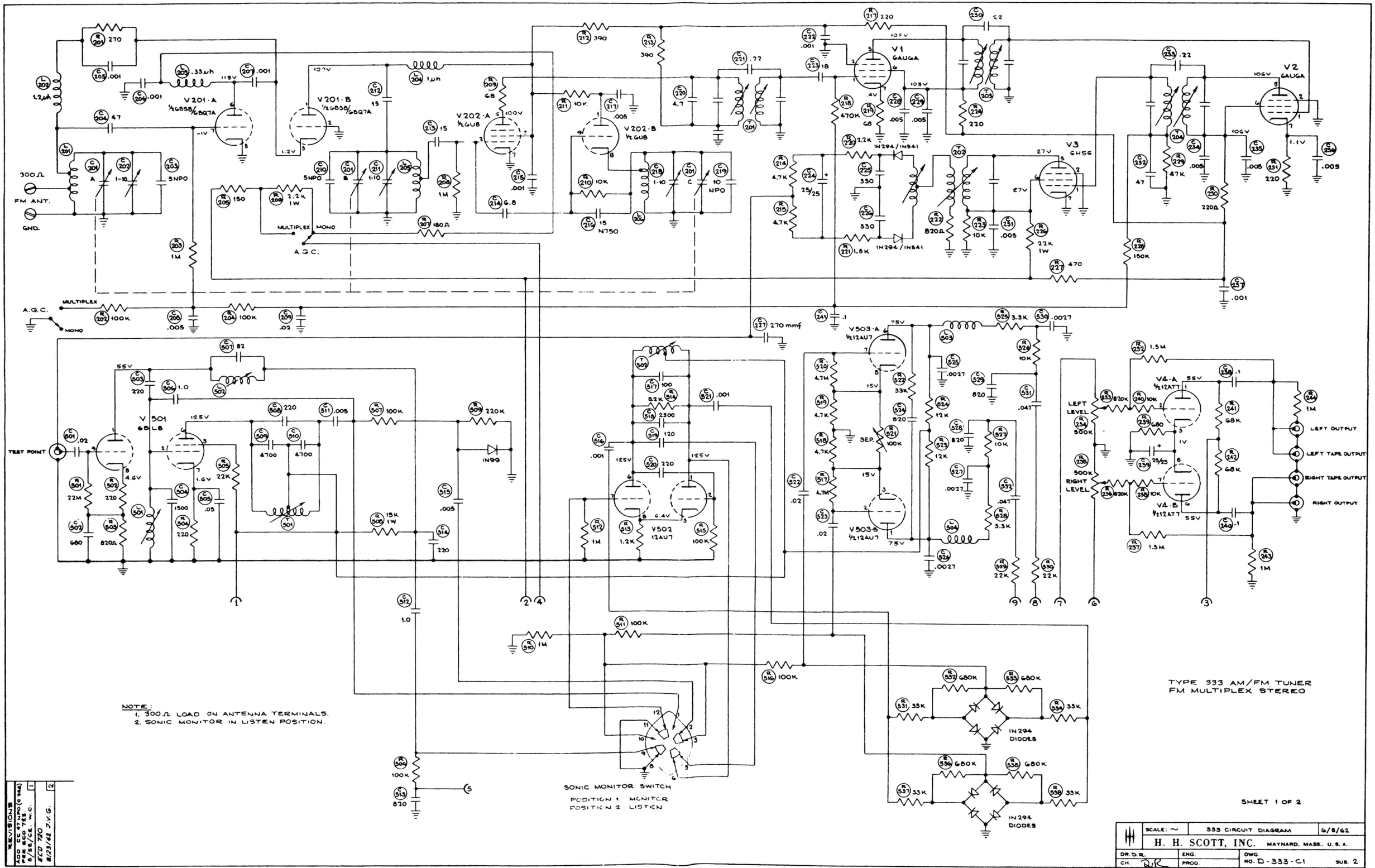

C532, R530, R244, C241; L202, T204, L504, T502

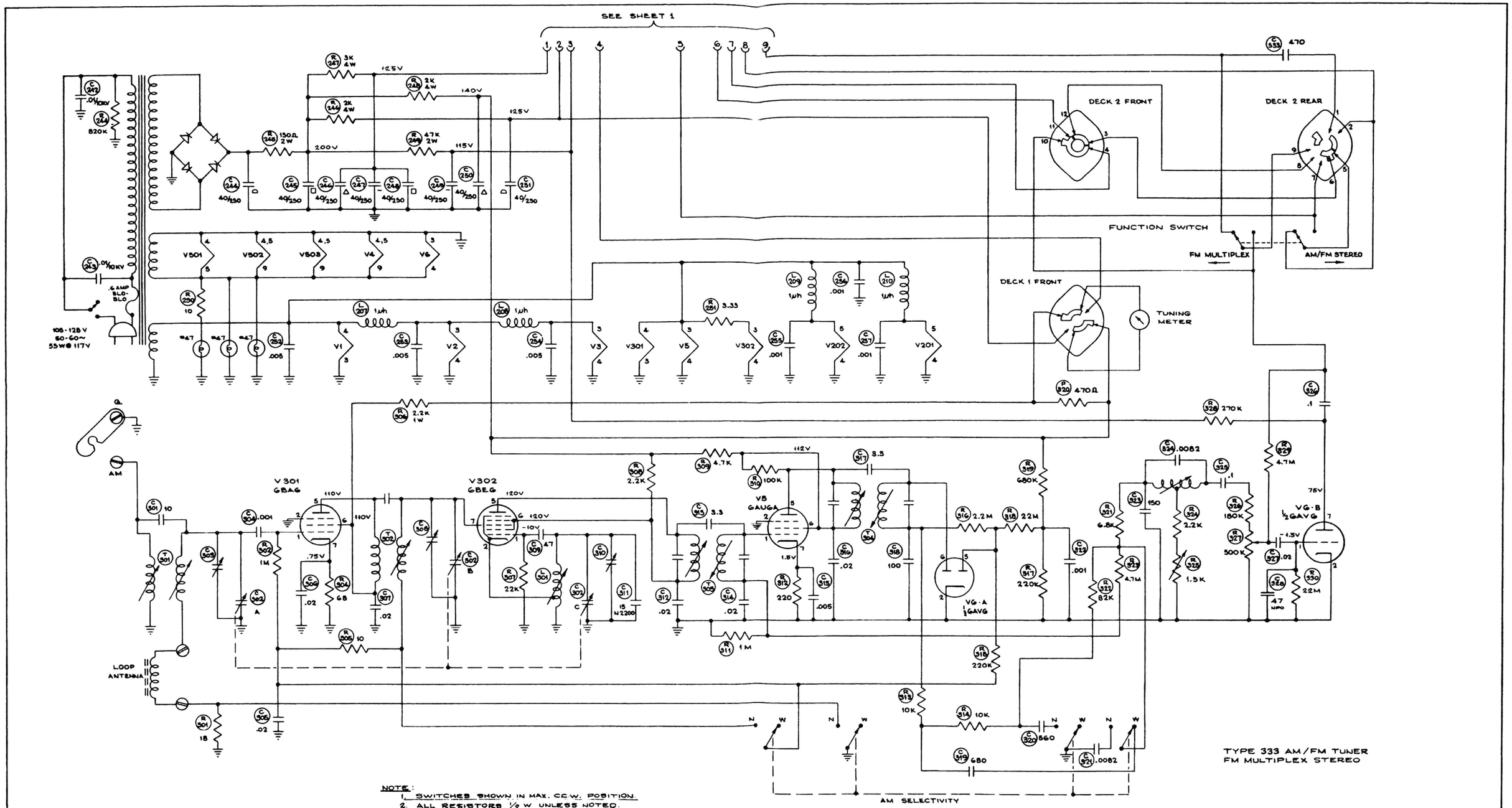

C 328, R 330 ; C257, R251 ; C533, : T364, L361, L210